STREET FUNCTIONAL CLASSIFICATIONS

A. ARTERIAL

A GENERAL TERM DENOTING A HIGHWAY PRIMARILY FOR THROUGH TRAFFIC, CARRYING HEAVY LOADS AND LARGE VOLUMES OF TRAFFIC, USUALLY ON A CONTINUOUS ROUTE.

B. COLLECTOR

A THOROUGHFARE, WHETHER WITHIN A RESIDENTIAL, INDUSTRIAL, COMMERCIAL OR OTHER TYPE OF DEVELOPMENT, WHICH PRIMARILY CARRIES TRAFFIC FROM LOCAL STREETS TO ARTERIAL STREETS OR TO OTHER COLLECTOR STREETS INCLUDING THE PRINCIPAL ENTRANCE AND CIRCULATION ROUTES WITHIN RESIDENTIAL SUBDIVISIONS.

C. LOCAL

A STREET DESIGNED TO PROVIDE ACCESS TO ABUTTING PROPERTY AND HAS NO THROUGH TRAFFIC. IE. CUL DE SAC.

STREET FUNCTIONAL CLASSIFICATION	RIGHT-OF-WAY WIDTH	BACK-TO-BACK CURB
	(L.F.)	(L.F.)
ARTERIAL	60	45
COLLECTOR - RES.	60	37
COLLECTOR - IND. AND COMM.	60	41
LOCAL	50	31

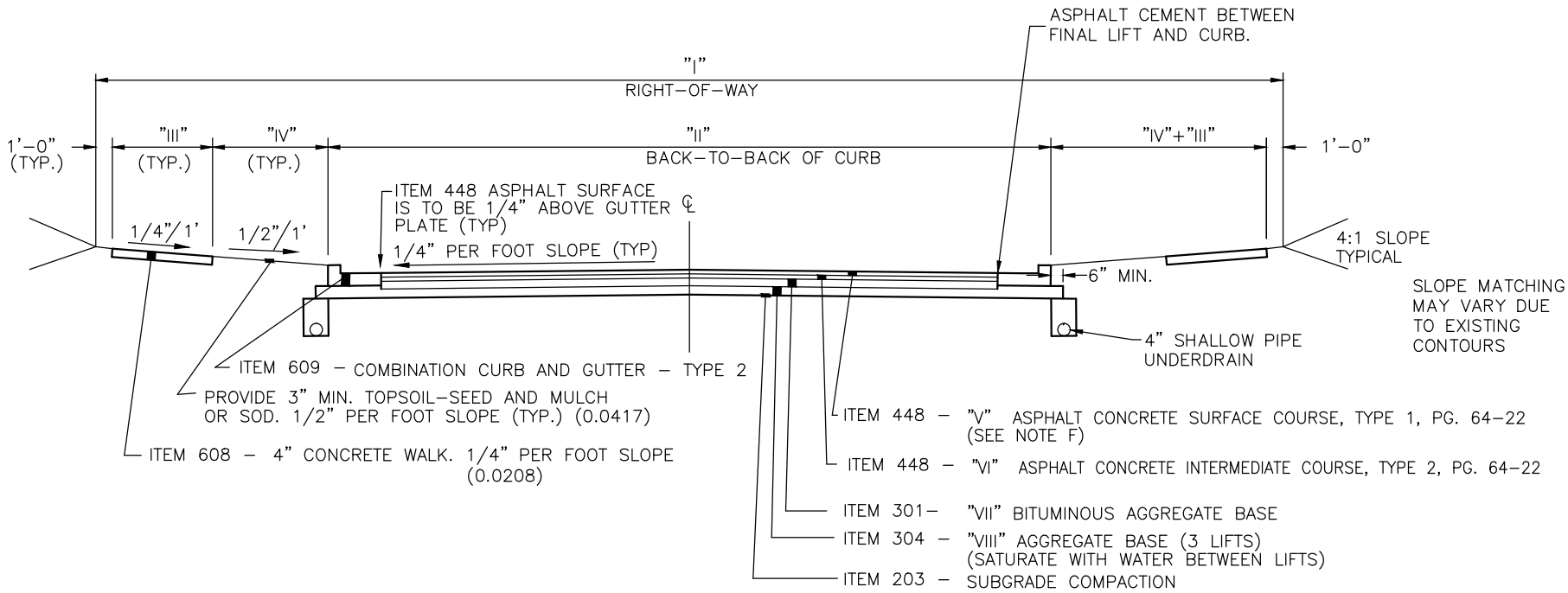

NOTES

A. ALL WORK TO CONFORM TO ODOT CONSTRUCTION AND MATERIAL SPECIFICATIONS LATEST REVISION UNLESS OTHERWISE SPECIFIED.

B. ITEM 407 TACK COAT, SHALL BE REQUIRED WHEN 10 DAYS HAVE ELAPSED BETWEEN BITUMINOUS PAVEMENT LIFTS UNLESS OTHERWISE SPECIFIED BY THE ENGINEER. APPLICATION RATE IS .10 GALLON PER SQUARE YARD.

C. ALL BUTT JOINTS SHALL BE SEALED WITH PG 64–22 WITHIN 24 HOURS AFTER PLACEMENT OF ITEM 448.

D. STANDARD DIMENSIONS FOR (II) B\B CURB AND (IV) APRON WIDTH ASSUME PARKING ON BOTH SIDES.

E. SIDEWALK OF 4' WIDTH MAY BE APPROVED BY THE CITY ON ARTERIAL, AND COMMERCIAL. SIDEWALKS ARE NOT REQUIRED ON INDUSTRIAL STREETS.

F. IN AREAS WITH HIGH POTENTIAL OF PUSHING, SHOVING OR HEAVING, USE ITEM 448 ASPHALT CONCRETE SURFACE COURSE TYPE 1 H, PG. 70–22. IN SMALL QUANTITY AREAS USE TYPE 1, PG 64–22 WITH GILSONITE ADDITIVE.

G. NO CONCRETE PAVEMENT WILL BE ACCEPTED.

MINIMUM STANDARDS

	ITEM	DESCRIPTION	ARTERIAL	COMM.&IND.	RESIDENTIAL COLLECTOR	LOCAL
STANDARD DIMENSIONS	I	RIGHT–OF–WAY	60'	60'	60	50
	II	B\B CURB	45'	41'	36	30
	III	SIDEWALK WIDTH	4'	4'	4'	4'
	IV	CURB LAWN WIDTH	3'	5'	7'	4.5'
AGGREGATE BASE	V	ITEM 448	1–1/2"	1–1/2"	1–1/2"	1–1/2"
	VI	ITEM 448	1–1/2"	1–1/2"	2–1/2"	1–1/2"
	VII	ITEM 301	7"	3"	—	—
	VIII	ITEM 304	6" 2 LIFTS	12" 3 LIFTS	12" 3 LIFTS	12" 3 LIFTS

* SEE DESIGN CRITERIA AND CITY ENGINEER

VILLAGE OF COVINGTON

CHOICE ONE ENGINEERING

TYPICAL SECTIONS AND ASPHALT PAVEMENT COMPOSITION

REVISIONS:

DATE APPROVED: NOV. 2003

PAGE No. 300–2

TYPICAL STREET AND CUL-DE-SAC PLAN

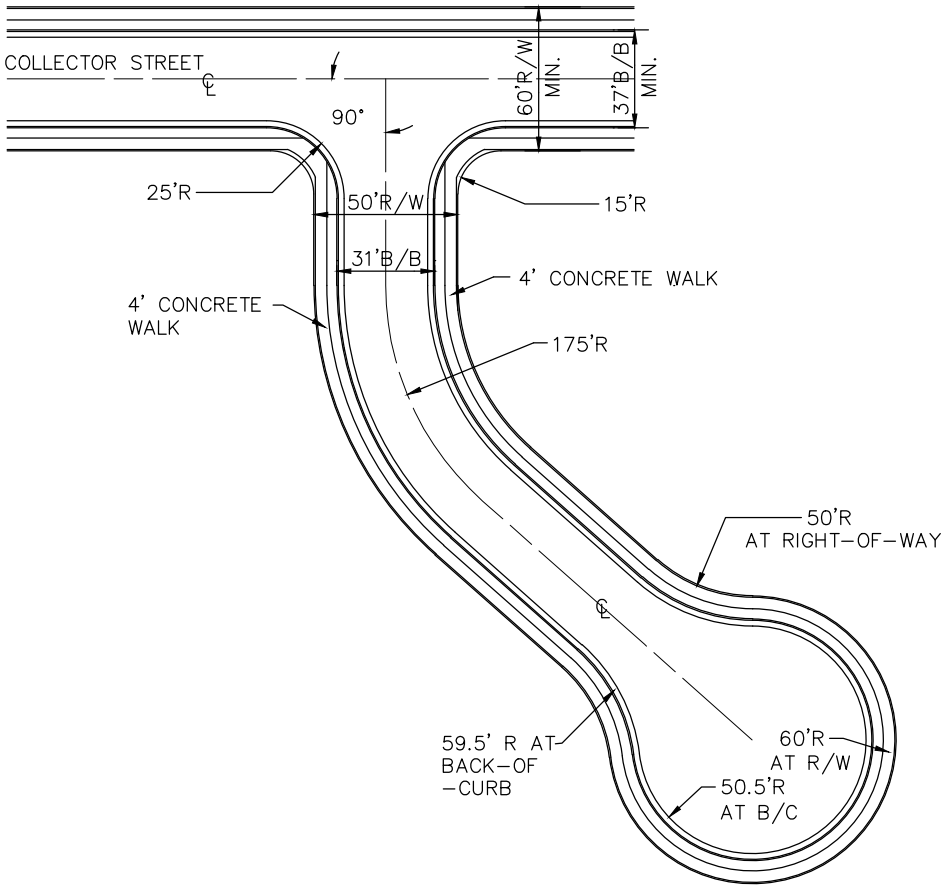

STREET DESIGN STANDARDS

	*25 mph LOCAL (THRU STREETS)	*35 mph COLLECTOR	*45 mph ARTERIAL
MINIMUM CENTERLINE GRADES	.50%	.50%	.50%
MAXIMUM CENTERLINE GRADES	10%	7%	4%
MINIMUM LENGTH OF VERTICAL CURVE (SEE NOTE C).	25FT.	50FT.	100FT.
MINIMUM CENTERLINE RADIUS	250FT.	400FT.	600FT.
MINIMUM LENGTH TANGENT BETWEEN CURVES	50FT.	50FT.	100FT.
MINIMUM BACK-OF-CURB RADIUS	25FT.	25FT.	50FT.
MINIMUM HORIZONTAL VISIBILITY	150FT.	250FT.	500FT.
MINIMUM STOPPING SIGHT DISTANCE (MEASURED FROM 3.5' EYE-LEVEL TO 6" OBJECT HEIGHT)	150FT.	250FT.	500FT.
MAXIMUM CENTERLINE GRADE WITHIN 100' OF AN INTERSECTION	3%	3%	3%
RIGHT-OF-WAY WIDTH	50FT.	60FT.	60FT.
MINIMUM PAVEMENT WIDTH BACK-TO-BACK OF CURB	31FT.	37FT.	45FT.

NOTES

A. THESE ARE MINIMUM DESIGN STANDARDS AND MAY BE REQUIRED TO BE INCREASED TO COMPLY WITH THE VILLAGE'S OFFICIAL THOROUGHFARE PLAN.

B. THE MAXIMUM LENGTH FOR CUL-DE-SAC STREET SHALL BE 600' CENTER-OF-STREET TO CENTER OF CUL-DE-SAC UNLESS AUTHORIZED BY VILLAGE PLANNING COMMISSION.

C. MINIMUM LENGTH OF VERTICAL CURVE CAN BE REDUCED OR ELIMINATED TO ALLOW FOR PROPER DRAINAGE, WITH APPROVAL OF THE VILLAGE.

*THESE ARE DESIGN SPEEDS, NOT NECESSARILY POSTED SPEEDS.

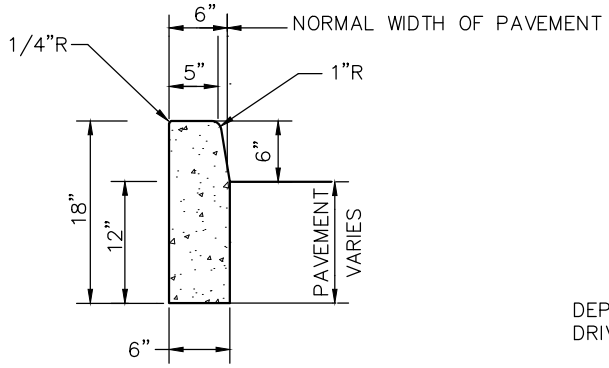

TYPE 6
BARRIER CURB

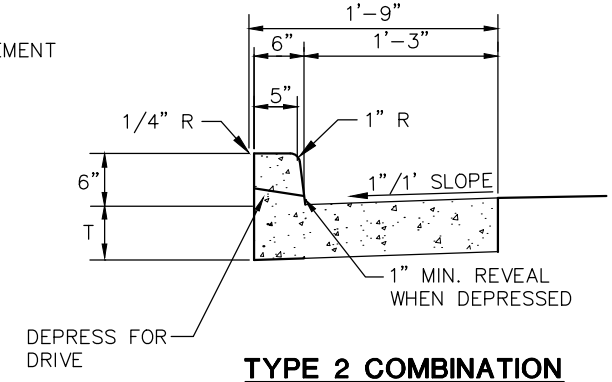

TYPE 2 COMBINATION
CURB AND GUTTER

T=6" LOCAL
T=7" RES. COLLECTOR
T=10" BUS. COLLECTOR
AND ARTERIAL

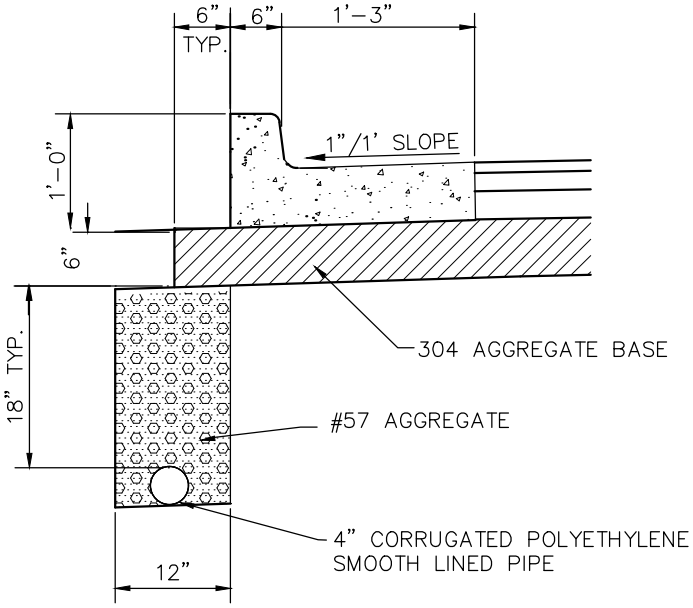

4" SHALLOW PIPE UNDERDRAIN DETAIL
(REQUIRED ON ALL ROADWAYS)

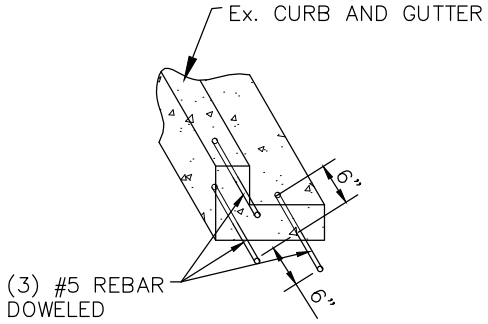

REINFORCING BAR DETAIL

1. #5 REBAR IS TO BE USED WHEREVER PROPOSED CURB/SIDEWALK/DRIVE IS TYING INTO Ex. CURB/SIDEWALK/DRIVE.

2. BORE A $\frac{3}{4}$" HOLE 2" LONGER THAN DOWEL EXTENSION 8" INTO EXISTING CONCRETE. CAULK DOWEL OPENINGS CLOSED TO PREVENT CONCRETE/CEMENT SLURRY FROM ENTERING DOWEL HOLE TO ALLOW FOR EXPANSION. INSTALL A $\frac{1}{2}$" EXPANSION JOINT.

3. ALL REBAR TO BE CHAIRED UP.

NOTES

A. CONCRETE WORK SHALL MEET THE REQUIREMENTS SET FORTH IN ODOT ITEM 609 CURBING.

B. CURBING SHALL HAVE CONTRACTION JOINTS EVERY 10'.

C. MINIMUM OF 6" OF ODOT 304 SHALL BE PLACED UNDER CURBING.

D. CURBING SHALL BE BACKFILLED IMMEDIATELY AFTER FORMS ARE REMOVED OR AS SOON AS PRACTICAL WHEN SLIP FORMING PRIOR TO OTHER CONSTRUCTION OPERATIONS.

E. PROVIDE BROOM FINISH AND EDGING TO ALL EXPOSED SURFACES.

F. APPLY CLEAR CURING COMPOUND ON ALL SURFACES INCLUDING BACK IMMEDIATELY AFTER FINISHING SURFACES. ANY OTHER METHOD OR TYPE OF CURING COMPOUND MUST BE PREAPPROVED.

G. CONCRETE SHALL BE ODOT CLASS C WITH 1.5LB FIBER MESH PER CUBIC YARD AND REINFORCED WITH #5 REBAR PER DETAIL (4000 PSI, 600LB/CY CEMENT). PROPORTIONING OPTIONS 1 AND 2 NOT ALLOWED.

H. CONCRETE SHALL CONTAIN 6% ± 1% OF TOTAL AIR.

I. TYPE 6 CURBS ARE FOR USE AROUND MEDIAN SECTION.

J. UNDERDRAIN MUST BE INSTALLED PRIOR TO CURB INSTALLATION.

K. MINIMUM FLOW LINE SLOPE OF PERFORATED PIPE IS 0.003 FT/FT TO OUTLET.

L. UNDERDRAIN MAY BE USED FOR SUMP PUMP DRAINS WITH A MANUFACTURED TEE, WHEN NO OTHER STORM OUTLET IS AVAILABLE AS DETERMINED BY THE VILLAGE. IN NO CASE SHALL DOWNSPOUTS BE TIED INTO THE UNDERDRAIN.

M. ALL UNDERGROUND UTILITY LATERALS SHALL BE MARKED IN THE TOP OF CURB WHILE IT IS BEING POURED AS FOLLOWS:
"W" – WATER SERVICE, "S" – STORM LATERAL, "SS" – SANITARY LATERAL, "G" – GAS SERVICE

VILLAGE OF COVINGTON CHOICE ONE ENGINEERING	CONCRETE CURB DETAILS	REVISIONS: 10-4-12	DATE APPROVED: FEB. 2002 PAGE No. 300-5

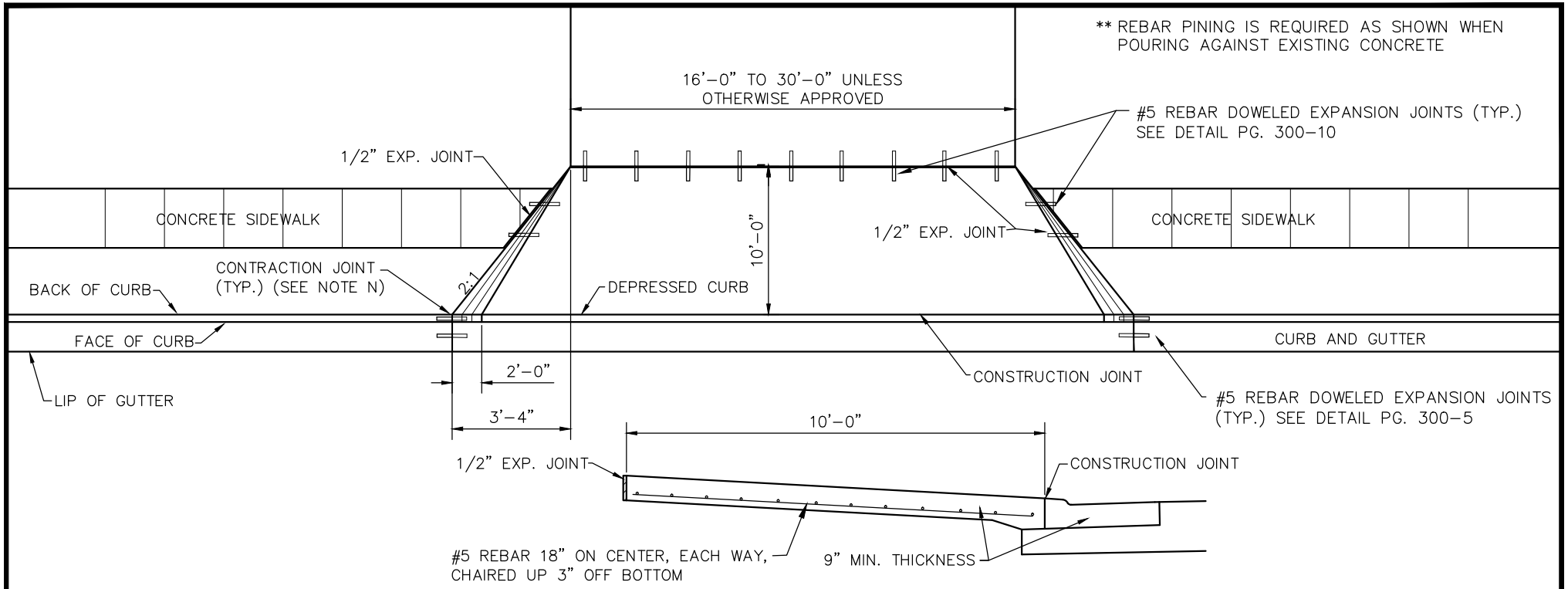

NOTES

A. DRIVE APPROACHES SHALL MEET THE REQUIREMENTS OF ODOT ITEM 452 AND 499 CAST IN PLACE CONCRETE.

B. DRIVE APPROACHES SHALL NOT BE POURED MONOLITHICALLY WITH CURB.

C. MAXIMUM JOINT SPACING SHALL BE 10' LONGITUDINALLY AND TRANSVERSELY WITH JOINTS AT TAPERS.

D. EXPANSION MATERIAL SHALL BE 1/2" PREMOLDED.

E. COMPACTED AGGREGATE SHALL BE PLACED UNDER DRIVE APPROACHES IF DETERMINED NECESSARY BY THE VILLAGE.

F. PROVIDE BROOM FINISH AND EDGING TO ALL EXPOSED SURFACES.

G. WHERE CURB AND GUTTER HAS NOT BEEN PROPERLY DROPPED AT DRIVE APPROACHES, THE CURB SHALL BE ENTIRELY REMOVED AND REPLACED BY THE CONTRACTOR/OWNER.

H. WHERE ASPHALTIC CONCRETE PAVEMENT IS DISTURBED, THE ASPHALT SHALL BE REPLACED AS DIRECTED BY THE VILLAGE.

I. JOINTS SHALL BE CLEANED AND EDGED BY A 1/4" RADIUS EDGER. LONGITUDINAL JOINTS SHALL BE AS DIRECTED BY THE VILLAGE. EXPANSION JOINTS SHALL BE OF SUCH DIMENSIONS AS SHOWN ON STANDARD DRAWINGS FOR CONSTRUCTION JOINTS.

J. MINIMUM WIDTH FOR ONE-WAY TRAFFIC IS 16'-0". MINIMUM WIDTH FOR TWO-WAY TRAFFIC IS 25'-0". MAXIMUM WIDTH IS 30'-0" UNLESS OTHERWISE APPROVED BY THE VILLAGE.

K. THIS STANDARD DRAWING IS FOR GUIDELINE PURPOSES. EACH INDIVIDUAL DRIVE WILL NEED TO BE DESIGNED AND SUBMITTED TO THE VILLAGE FOR REVIEW AND APPROVAL.

L. CONCRETE SHALL BE ODOT CLASS C WITH 1.5LB FIBER MESH PER CUBIC YARD AND REINFORCED WITH #5 REBAR PER DETAIL (4000 PSI, 600 LB/CY CEMENT. PROPORTIONING OPTIONS 1 AND 2 NOT ALLOWED.

M. CONCRETE SHALL CONTAIN 6% ± 1% OF TOTAL AIR.

N. IF CURB IS REMOVED AND REPLACED DURING DRIVEWAY CONSTRUCTION, JOINTS BETWEEN EXISTING AND NEW CURB ARE TO CONTAIN 1/2" EXPANSION MATERIAL AND #5 REBAR PER THE DETAIL ON PG. 300-5. THE CURB THICKNESS SHALL MATCH THE NEW DRIVE THICKNESS.

VILLAGE OF COVINGTON CHOICE ONE ENGINEERING	COMMERCIAL AND INDUSTRIAL DRIVE APPROACH	REVISIONS: 10-4-12	DATE APPROVED: NOV. 2003 PAGE No. 300-6

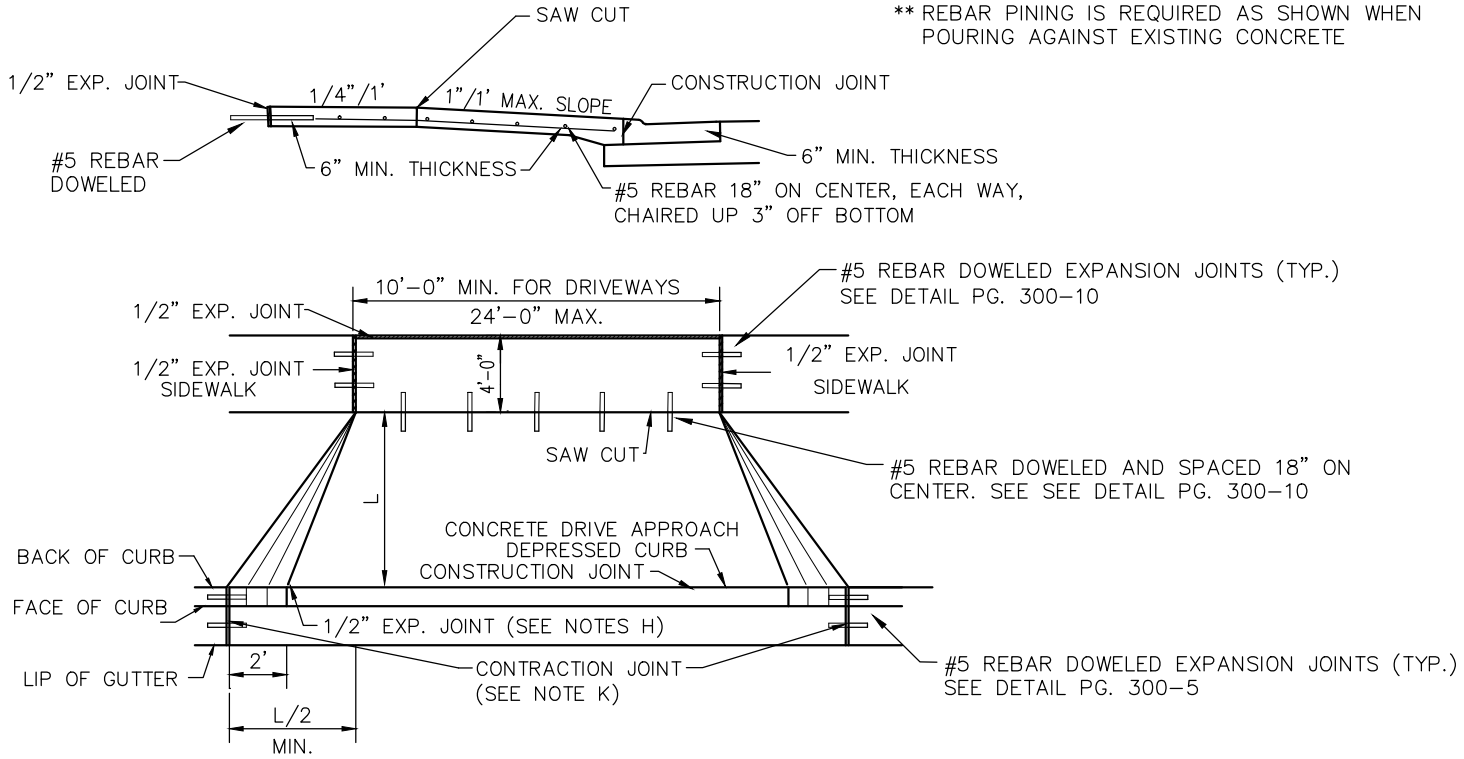

RESIDENTIAL DRIVE APPROACH

NOTES

A. DRIVE APPROACHES SHALL MEET THE REQUIREMENTS OF ODOT ITEM 452 AND 499 CAST-IN-PLACE CONCRETE.

B. MAXIMUM JOINT SPACING SHALL BE 10' LONGITUDINALLY, TRANSVERSELY AND AT TAPERS.

C. EXPANSION MATERIAL SHALL BE 1/2" PREMOLDED.

D. 3" OF GRAVEL SHALL BE PLACED UNDER DRIVE APPROACHES IF DETERMINED NECESSARY BY THE CITY.

E. PROVIDE BROOM FINISH AND EDGING TO ALL EXPOSED SURFACES.

F. WHERE CURB AND GUTTER HAVE NOT BEEN PROPERLY DROPPED AT DRIVE APPROACHES, THE CURB SHALL BE ENTIRELY REMOVED AND REPLACED BY THE CONTRACTOR/OWNER.

G. JOINTS SHALL BE CLEANED AND EDGED BY A 1/4" RADIUS EDGER. LONGITUDINAL JOINTS SHALL BE AS DIRECTED BY THE CITY. EXPANSION JOINTS SHALL BE OF SUCH DIMENSIONS AS SHOWN ON STANDARD DRAWINGS FOR CONSTRUCTION JOINTS.

H. EXPANSION JOINT LOCATION MAY BE ALTERED WITH VILLAGE APPROVAL.

I. CONCRETE SHALL BE ODOT CLASS C WITH 1.5LB FIBER MESH PER CUBIC YARD AND REINFORCED WITH #5 REBAR PER DETAIL (4000 PSI, 600 LB/CY) CEMENT. PROPORTIONING OPTIONS 1 AND 2 NOT ALLOWED.

J. CONCRETE SHALL CONTAIN 6% ± 1% OF TOTAL AIR.

K. IF CURB IS REMOVED AND REPLACED DURING DRIVEWAY CONSTRUCTION, JOINTS BETWEEN EXISTING AND NEW CURB ARE TO CONTAIN 1/2" EXPANSION MATERIAL AND #5 REBAR PER THE DETAIL ON PG. 300-5. THE CURB THICKNESS SHALL MATCH THE NEW DRIVE THICKNESS.

VILLAGE OF COVINGTON CHOICE ONE ENGINEERING	RESIDENTIAL DRIVE APPROACH	REVISIONS: 10-4-12	DATE APPROVED: NOV. 2003 PAGE No. 300-7

** REBAR PINING IS REQUIRED AS SHOWN WHEN POURING AGAINST EXISTING CONCRETE

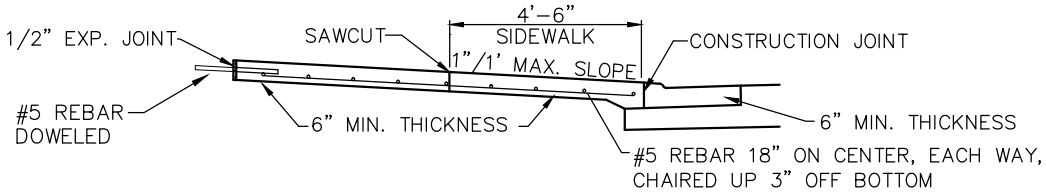

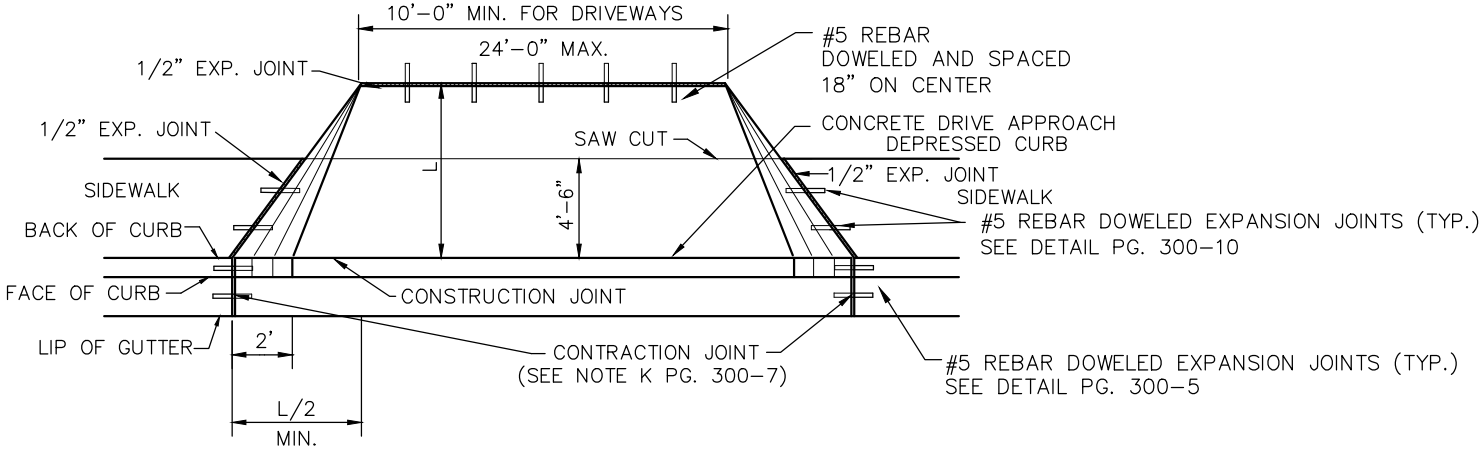

DRIVE APRON WITH NO CURB LAWN

FOR DRIVEWAY NOTES SEE PAGE 300-7

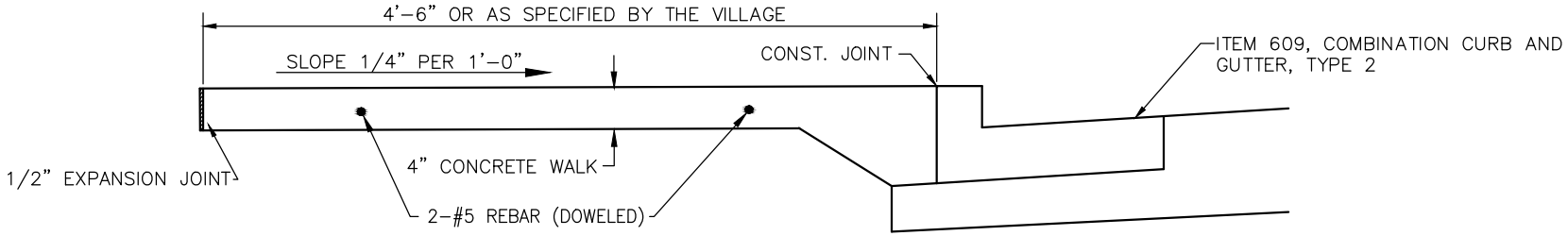

CONCRETE SIDEWALK ABUTTING TYPE 2 CURB DETAIL

VILLAGE OF COVINGTON CHOICE ONE ENGINEERING	RESIDENTIAL DRIVE APPROACH AND CONCRETE SIDEWALK DETAIL WITH NO CURB LAWN	REVISIONS: 10-4-12	DATE APPROVED: NOV. 2003 PAGE No. 300-8

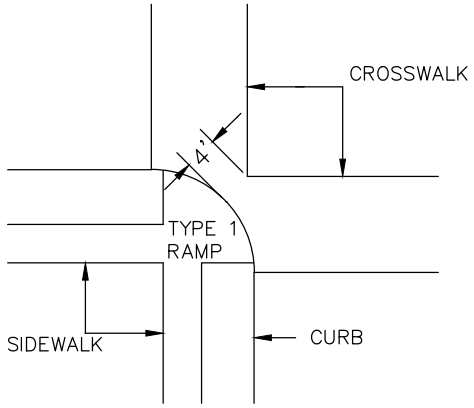

RAMP CONFIGURATION A

(USE ONLY WITH APPROVAL FROM VILLAGE ENGINEER)

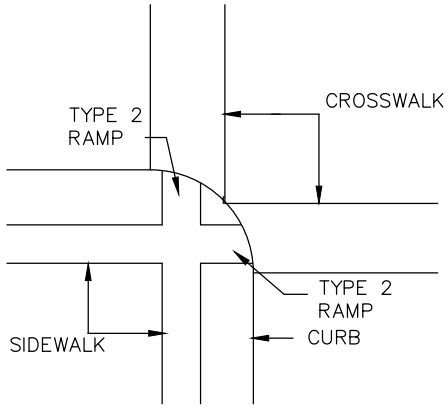

RAMP CONFIGURATION B

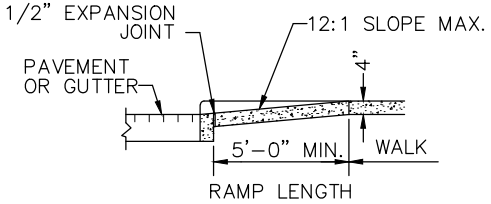

SECTION A-A

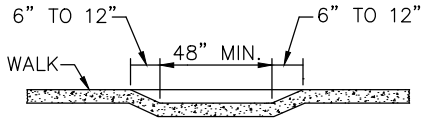

SECTION D-D

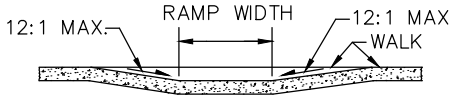

SECTION C-C

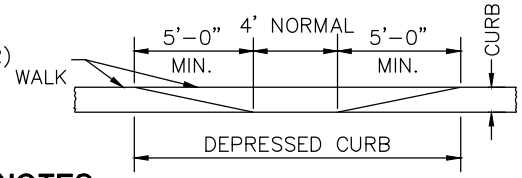

VIEW B-B

NOTES

A. VILLAGE TO SPECIFY TYPE 1 OR TYPE 2 CURB RAMP.

B. ANY COMBINATION OF SIDE SLOPES ON OPPOSITE SIDES OF A RAMP MAY BE USED TO BEST FIT THE SITE CONDITIONS.

C. THE MINIMUM RAMP LENGTH IS 5' FROM BACK OF A 6" CURB AND MAY BE INCREASED WHERE FEASIBLE TO OBTAIN A FLATTER RAMP SLOPE OR TO BETTER BLEND WITH THE WALK CONFIGURATION.

D. WALK THICKNESS IN THE RAMP SLOPES SHALL BE 4" MINIMUM OR THICKER AS NECESSARY TO MATCH ADJACENT WALK THICKNESS.

E. CURB RAMPS SHALL MEET AND BE FINISHED TO A.D.A. STANDARDS AS MUCH AS POSSIBLE.

F. CURB RAMPS SHALL MEET THE REQUIREMENTS OF ODOT ITEM 608 UNLESS OTHERWISE SPECIFIED WITHIN.

G. CONCRETE SHALL BE ODOT CLASS C WITH 1.5LB FIBER MESH PER CUBIC YARD AND REINFORCED WITH #5 REBAR PER DETAIL (4000 PSI, 600 LB/CY CEMENT). PROPORTIONING OPTIONS 1 AND 2 NOT ALLOWED.

H. CONCRETE SHALL CONTAIN 6% ± 1% OF TOTAL AIR.

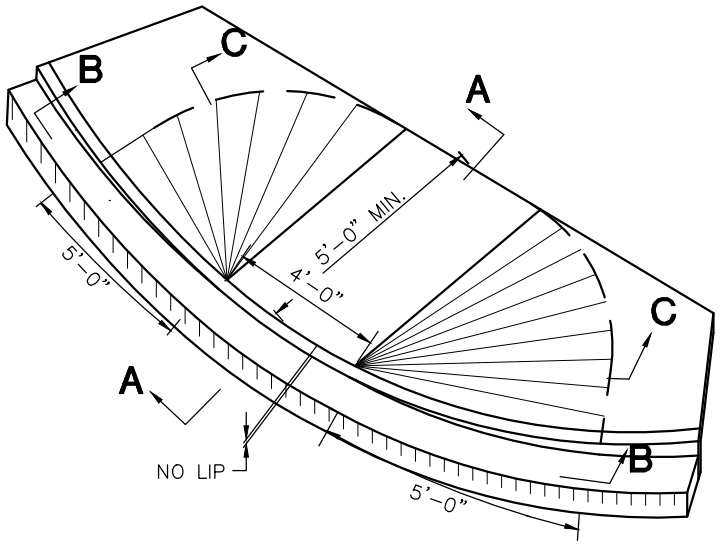

TYPE 1 RAMP DETAIL

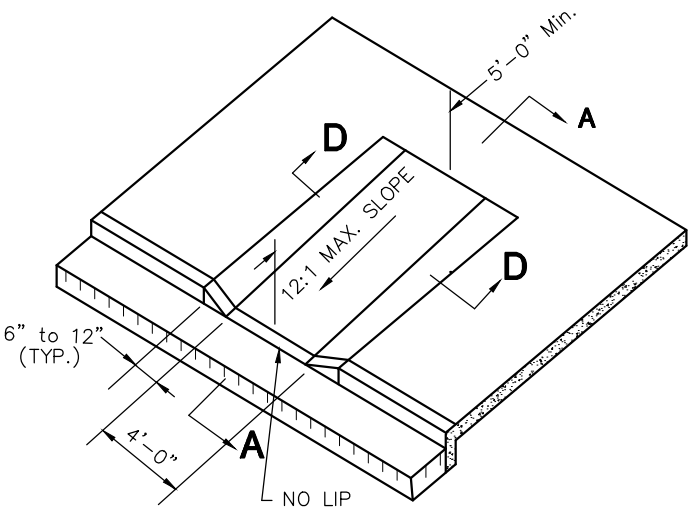

TYPE 2 RAMP DETAIL

VILLAGE OF COVINGTON CHOICE ONE ENGINEERING	CURB RAMPS	REVISIONS: 10-4-12	DATE APPROVED: NOV. 2003 PAGE No. 300-9

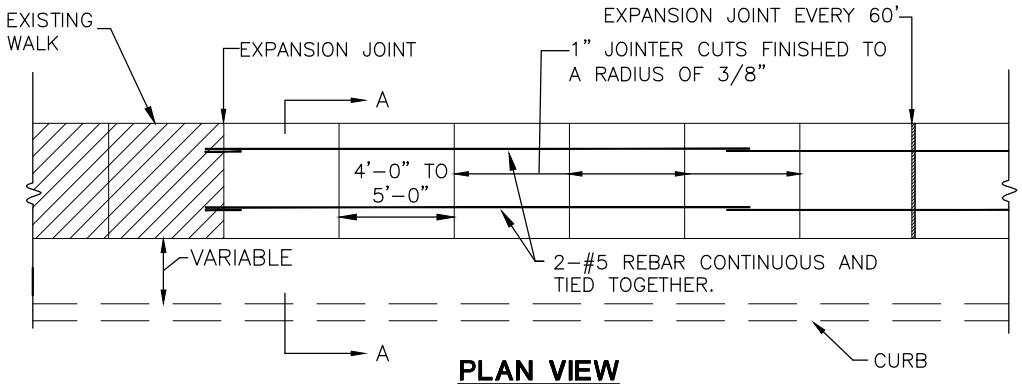

PLAN VIEW

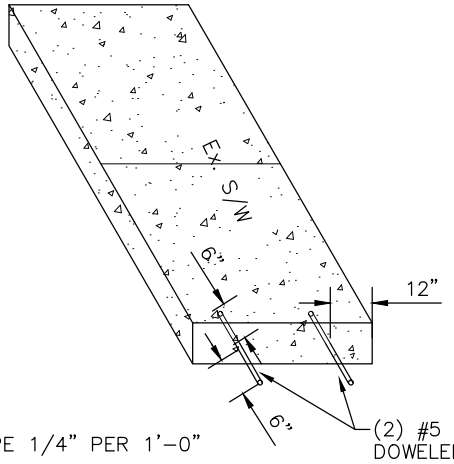

1. #5 REBAR IS TO BE USED WHEREVER PROPOSED CURB/SIDEWALK/DRIVE IS TYING INTO Ex. CURB/SIDEWALK/DRIVE. REBAR SHALL ALSO BE PLACED IN ALL NEW CONCRETE SIDEWALKS AS SHOWN.

2. BORE A $\frac{3}{4}$" HOLE 2" LONGER THAN DOWEL EXTENSION 8" INTO EXISTING CONCRETE. CAULK DOWEL OPENINGS CLOSED TO PREVENT CONCRETE/CEMENT SLURRY FROM ENTERING DOWEL HOLE TO ALLOW FOR EXPANSION. INSTALL A $\frac{1}{2}$" EXPANSION JOINT.

3. ALL REBAR TO BE CHAIRED UP.

REINFORCING BAR DETAIL

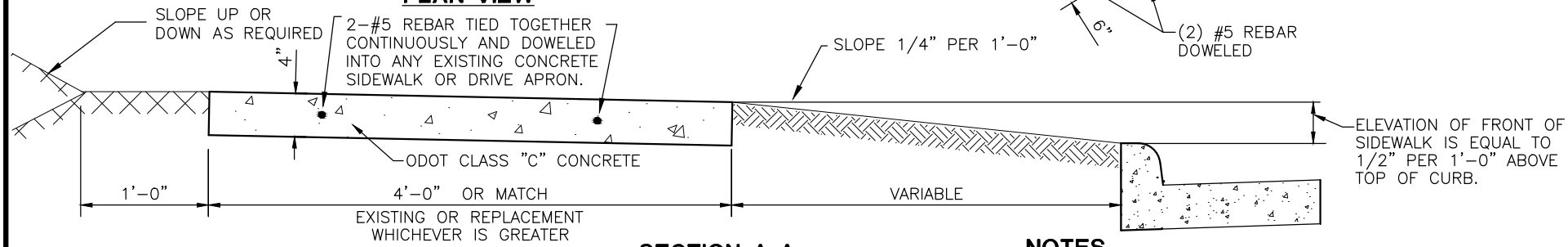

SECTION A-A

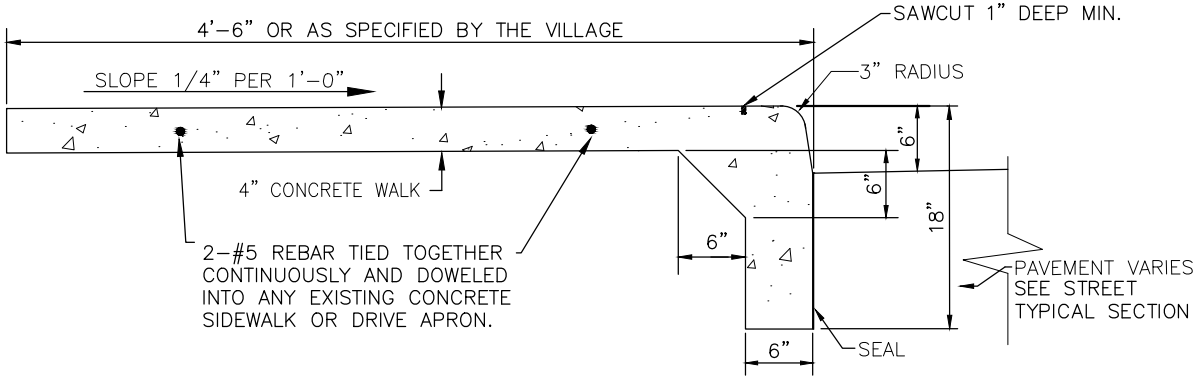

COMBINED CURB AND SIDEWALK DETAIL

NOTES

A. WALK TO BE POURED ON UNDISTURBED EARTH OR COMPACTED GRANULAR BEDDING.

B. PROVIDE BROOM FINISH TO ALL EXPOSED SURFACES.

C. CONCRETE SHALL CONFORM TO ODOT ITEM 499 CONCRETE. CONCRETE WORK SHALL CONFORM TO ODOT ITEM 608, UNLESS OTHERWISE SPECIFIED WITHIN.

D. PROVIDE EDGING AROUND ALL EXPOSED SURFACES.

E. USE CLEAR CURING COMPOUND IMMEDIATELY AFTER FINISHING SURFACES. ANY OTHER METHOD OR TYPE OF CURING COMPOUND MUST BE PREAPPROVED.

F. WHEN RENOVATING EXISTING STREETS, THE SIDEWALKS SHALL BE REPLACED TO CONFORM WITH THE VILLAGE CONSTRUCTION STANDARDS AND DRAWINGS.

G. CONCRETE SHALL BE ODOT CLASS C WITH 1.5LB FIBER MESH PER CUBIC YARD AND REINFORCED WITH #5 REBAR PER DETAIL (4000 PSI, 600LB/CY CEMENT). PROPORTIONING OPTIONS 1 AND 2 NOT ALLOWED.

H. CONCRETE SHALL CONTAIN 6% ± 1% OF TOTAL AIR.

VILLAGE OF COVINGTON CHOICE ONE ENGINEERING	CONCRETE SIDEWALK DETAIL	REVISIONS: 10-4-12 5-15-13	DATE APPROVED: NOV. 2003 PAGE No. 300-10

EXAMPLE: 3/4 INCH TRIP HAZARD

ADJOINING BLOCKS OR PORTIONS THEREOF WHOSE EDGES DIFFER VERTICALLY BY MORE THAN 3/4 INCH.

EXAMPLE: DETERIORATION

ANY SIDEWALK THAT IS DETERIORATED OR SHOWS SURFACE SPALLING, LEAVING IT VERY ROUGH, UNSAFE, OR WITH AGGREGATE PROTRUDING.

EXAMPLE: ABRUPT SLOPE

BLOCKS, OR PORTION OF BLOCKS, THAT CAUSE AN ABRUPT CHANGE OF 1 INCH PER FOOT (OR MORE) IN ANY DIRECTION OF THE SIDEWALK.

EXAMPLE: PLATES, COVERS, ETC.

METAL OR OTHER PLATES, COVERS, OR GRATINGS THAT ARE NOT FLUSH (3/4 INCH OR MORE VERTICAL DIFFERENCE) WITH THE ADJOINING SIDEWALK SURFACE, ARE STRUCTURALLY UNSAFE, OR CAUSE A NUISANCE DUE TO SLIPPERY SURFACES ETC.

EXAMPLE: CRACKS

ANY SIDEWALK BLOCK (BASED ON 20 SQ. FT.) HAVING A CRACK OR CRACKS IN IT OF AT LEAST 1/2 INCH WIDE WITH A MINIMUM OF 4 LINEAL FEET IN ONE BLOCK. (VARIOUS SIZE BLOCKS WILL BE EVALUATED PROPORTIONALLY.)

PERMITS, INSPECTION, AND WORK RULES

A. NO PERSON SHALL TEAR UP OR DIG INTO ANY PUBLIC RIGHT-OF-WAY OR STREET FOR THE PURPOSE OF CONSTRUCTING OR REPAIRING THE SIDEWALK, CURBING, OR GUTTERS THEREON OR FOR ANY OTHER PURPOSE, WITHOUT HAVING FIRST OBTAINED A PERMIT FROM THE ENGINEERING DEPARTMENT TO DO SO.

B. THE CONTRACTOR MUST CALL THE VILLAGE FOR AN INSPECTION AT LEAST THREE WORKING HOURS BEFORE HE PLANS TO POUR THE CONCRETE. THE CONTRACTOR OR HIS FOREMAN MUST BE ON THE JOB WHEN THE INSPECTOR ARRIVES. IF, BECAUSE OF WEATHER CONDITIONS OR FOR SOME OTHER REASON, IT WILL NOT BE POSSIBLE TO HAVE A PERSON ON THE JOB, THE CONTRACTOR IS REQUIRED TO CALL AND CANCEL THE INSPECTION.

C. THE CONTRACTOR IS CAUTIONED AGAINST ORDERING CONCRETE BEFORE THE INSPECTION IS MADE DUE TO POSSIBLE CORRECTION OF FORMS OR GRADE.

D. THE CONTRACTOR SHALL PROVIDE PROTECTION AND TRAFFIC CONTROL BARRICADES, LIGHTS, SIGNS, AND OTHER DEVICES AS HEREIN SPECIFIED TO PROVIDE WARNING AND PROTECTION FOR VEHICULAR TRAFFIC, PEDESTRIANS, AND THE WORK DURING THE REMOVAL, CONSTRUCTION AND CURING OF SIDEWALK, CURB AND GUTTER, AND DRIVEWAY APRONS.

E. THE CONTRACTOR WILL BE RESPONSIBLE FOR AN IMMEDIATE REMOVAL AND CLEANUP OF ALL EXCAVATED MATERIAL. NO EXCAVATED MATERIAL SHALL BE STORED ON THE PAVEMENT.

F. ALL CONTRACTORS INSTALLING NEW CURB ARE CAUTIONED THAT IT IS THEIR RESPONSIBILITY TO REPAIR THE STREET PER VILLAGE SPECIFICATIONS BEFORE REMOVING YOUR BARRICADES.

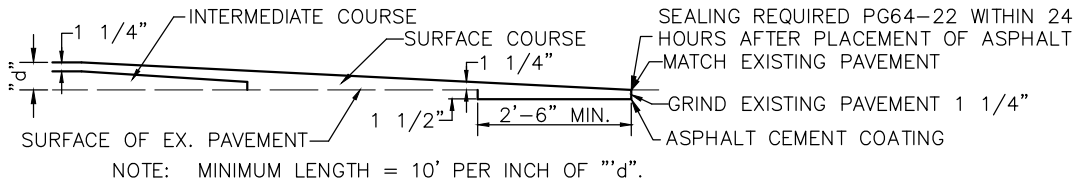

NOTE: MINIMUM LENGTH = 10' PER INCH OF "'d".

BUTT JOINT DETAIL

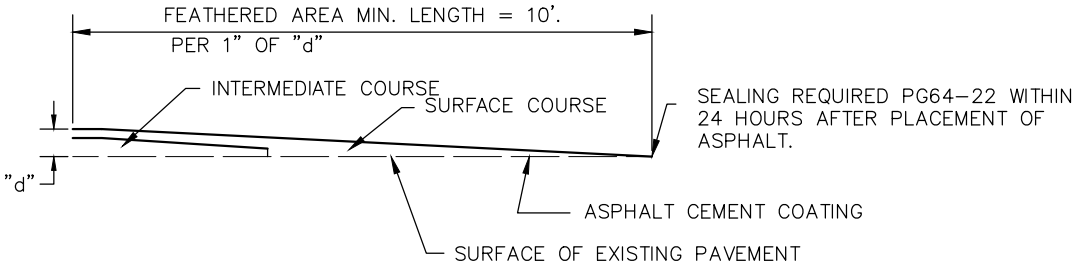

FEATHERING DETAIL

MANHOLES ADJUSTED TO GRADE FOR OVERLAYS

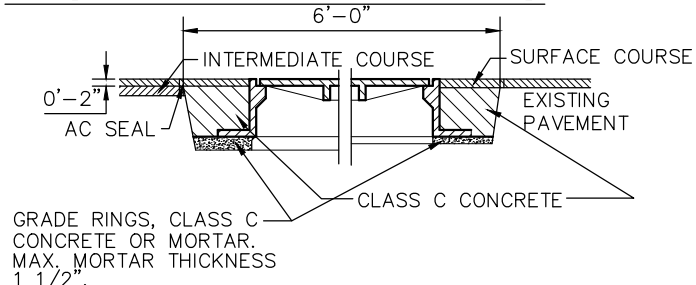

NOTE: SEE STORM AND SANITARY MANHOLE DETAILS

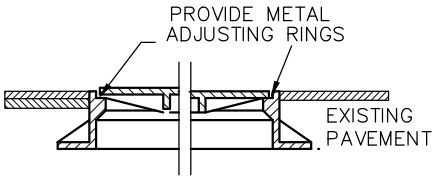

USING METAL ADJUSTING RINGS

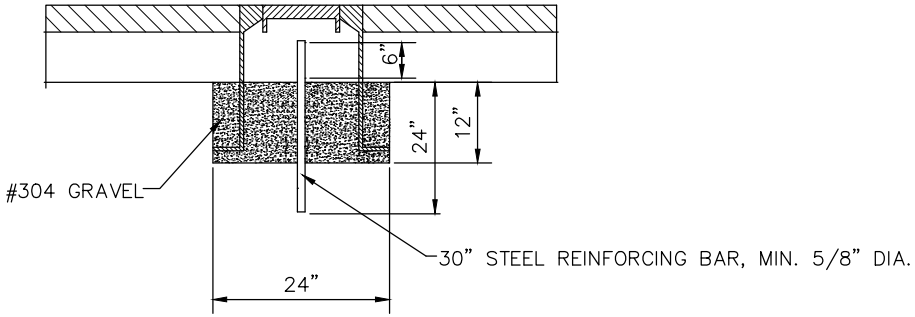

SURVEY MONUMENT DETAIL

NOTES

A. MONUMENT BOXES SHALL BE SET AT ALL STREET INTERSECTIONS AND CENTER POINTS OF CUL-DE-SACS. MONUMENT BOXES SHALL ALSO BE PLACED AT SECTION CORNERS OR OTHER SIGNIFICANT POINTS AT THE VILLAGE'S DISCRETION, SO LONG AS THESE CORNERS OR POINTS LIE WITHIN THE PAVED ROADWAY.

B. MONUMENT BOXES SHALL BE PLACED ON THE P.C. & P.T. OF A SIMPLE CURVE, OR THE T.S. & S.T. OF A SPIRAL CURVE. IF THE P.I. OF A SIMPLE CURVE IS ACCESSIBLE WITHIN THE PAVED ROADWAY THEN A MONUMENT BOX SHALL BE PLACED AT THE P.I. THE P.C. & P.T. CAN THEN BE ELIMINATED.

C. MONUMENT BOXES NOTED IN PARAGRAPH B MAY BE ELIMINATED IF A LINE OF SIGHT (TAKING INTO ACCOUNT BOTH HORIZONTAL AND VERTICAL FACTORS) IS AVAILABLE WITHIN THE CURBS BETWEEN REQUIRED MONUMENT BOXES TO BE INSTALLED (SEE PARAGRAPH A). IF MONUMENT BOXES ARE ELIMINATED, THEN APPROVED MONUMENTS SHALL BE SET IN THEIR PLACE.

D. MONUMENT BOXES SHALL BE SET PRIOR TO THE LAYING OF SURFACE ASPHALT COURSE UNLESS OTHERWISE PREAPPROVED.

E. MONUMENT ASSEMBLIES SHALL BE EAST JORDAN IRON WORKS 8375 OR EQUAL.

F. MONUMENT BOXES SHALL MEET THE REQUIREMENTS OF ODOT ITEM 604 UNLESS OTHERWISE SPECIFIED WITHIN.

VILLAGE OF COVINGTON CHOICE ONE ENGINEERING	ASPHALT OVERLAY AND MONUMENT	REVISIONS:	DATE APPROVED: NOV. 2003 PAGE No. 300-12

GENERAL

A. FAILURE TO COMPLY WITH THE CONSTRUCTION STANDARDS AND DRAWINGS AND DESIGN CRITERIA WILL REQUIRE REMOVAL AND REPLACEMENT IN ACCORDANCE WITH THESE STANDARDS.

B. ALL STREET CONSTRUCTION SHALL BE IN ACCORDANCE WITH ODOT SPECIFICATIONS, LATEST REVISION.

C. CONSTRUCTION IMPROVEMENTS AFFECTING THE EXISTING CONDITION, PERFORMANCE AND LIFE CYCLE OF VILLAGE STREETS, ALLEYS, OR RIGHTS-OF-WAY SHALL BE RESTORED TO THE REQUIREMENTS AND SATISFACTION OF THE VILLAGE OF SIDNEY'S ENGINEERING DEPARTMENT. ALL VILLAGE INFRASTRUCTURE SHALL BE ADEQUATELY RESTORED ACCORDING TO APPLICABLE STANDARDS AND DETAILS.

D. ALL NEW SUBDIVISIONS AND DEVELOPMENTS SHALL BE PROVIDED WITH PUBLIC SIDEWALKS ON BOTH SIDES OF STREETS IN ACCORDANCE WITH VILLAGE STANDARDS.

E. CURB CUTS FOR ALL NEW AND RECONSTRUCTED DRIVEWAYS SHALL CONFORM TO VILLAGE STANDARDS. ALL NEW DRIVEWAY APPROACHES SHALL BE CONSTRUCTED OF CONCRETE AND SUBJECT TO ALL VILLAGE REQUIREMENTS.

F. NO VILLAGE STREET OR ALLEY SHALL BE CLOSED UNLESS THE VILLAGE IS NOTIFIED A MINIMUM OF 48 HOURS IN ADVANCE OF A NON-EMERGENCY SITUATION. ADVANCED PUBLIC NOTIFICATION AND PUBLISHING SHALL BE A MINIMUM OF 24 HOURS.

PAVEMENT REPLACEMENT

A. IMMEDIATELY AFTER PLACEMENT OF BACKFILL IN EXISTING STREETS, A TEMPORARY PAVEMENT SHALL BE INSTALLED AND THE STREET OPENED. TEMPORARY PAVEMENT SHALL CONSIST OF 8" OF COMPACTED ODOT SPECIFICATION 411 OR 307. THE SURFACE SHALL BE MAINTAINED FLUSH WITH THE EXISTING STREET.

B. ANY SETTLEMENT OF A TRENCH CAUSING A DEPRESSION SHALL BE REFILLED AS REQUIRED BY THE VILLAGE AT THE CONTRACTOR'S EXPENSE. THIS PROVISION APPLIED FOR A ONE YEAR PERIOD AFTER WORK IS ACCEPTED BY THE VILLAGE.

C. ALL TEMPORARY PAVEMENT AND SIDEWALK SHALL BE MAINTAINED BY THE CONTRACTOR OR DEVELOPER AT HIS OWN EXPENSE IN A SUITABLE AND SAFE CONDITION FOR TRAFFIC UNTIL PERMANENT REPLACEMENT IS MADE OR THE PROJECT IS FINALLY ACCEPTED BY THE VILLAGE.

TRAFFIC CONTROL

A. THE CONTRACTOR SHALL MAINTAIN TRAFFIC CONTROL AT ALL TIMES WITH THE PROPER DEVICES AS PER THE OHIO MANUAL OF UNIFORM TRAFFIC CONTROL DEVICES. THESE CONTROL DEVICES SHALL BE IN PLACE PRIOR TO ANY WORK COMMENCING. CONTRACTOR WILL BE RESPONSIBLE FOR ALL TRAFFIC CONTROL ITEMS.

B. TRAFFIC SHALL BE MAINTAINED AT ALL TIMES UNLESS OTHERWISE APPROVED BY THE VILLAGE.

CURB STAKING AND ROADWAY

A. LINE AND GRADE EVERY 25' ON A CONVENIENT OFFSET WITH TACKED HUBS.

PAVEMENT (ASPHALT)

A. THE CONTRACTOR SHALL PROVIDE THE VILLAGE WITH A COPY OF THE NORMAL (MEDIUM TRAFFIC) ODOT 404 JOB MIX FORMULA FOR EACH PLANT THAT PROVIDES HOT MIXED ASPHALT TO THIS PROJECT. ALL MIXES SHALL FOLLOW ODOT JOB MIX FORMULA WITH THE EXCEPTION THAT THE BITUMEN CONTENT SHALL BE 0.2% HIGHER. SECTION 401.02 COMPOSITION OF THE CURRENT ODOT SPECIFICATIONS SHALL BE USED FOR ACCEPTANCE BASED ON THE INCREASED BITUMEN. A 448 OR 446 JOB MIX FORMULA WILL NOT BE ACCEPTABLE. RECYCLED ASPHALT SHALL NOT EXCEED 15% OF ANY 402 MIX PRODUCED. NO RECYCLED ASPHALT MAY BE USED IN THE ITEM 404 SURFACE COURSE.

B. THREE-WHEEL STEEL ROLLER OR EQUIVALENT SHALL BE USED FOR INITIAL BREAKDOWN ON ALL PROJECTS. THIS PROVISION SHALL BE FOR PLACING ASPHALT GREATER THAN 1-1/2" THICKNESS.

C. ALL WORK SHALL ADHERE TO ODOT'S LATEST REVISIONS AND TO THE VILLAGE SPECIFICATIONS. WHICHEVER IS MORE STRINGENT SHALL PREVAIL UNLESS OTHERWISE APPROVED.

D. PATCHED AREAS SHALL BE SEALED ON THE PERIMETER OF THE PATCH WITH ASPHALT CEMENT.

E. ALL UTILITY ADJUSTMENTS -- MANHOLE, WATER VALVES, ETC., -- SHALL BE RAISED TO FINISHED GRADE AFTER THE FINAL ASPHALT COURSE IS LAID, BUT WITHIN TWO WEEKS. PAVEMENT AROUND ADJUSTED UTILITIES SHALL BE REPLACED WITH SURFACE COURSE MATERIAL. NO CONCRETE TO SURFACE, UNLESS OTHERWISE APPROVED.

F. ASPHALT CEMENT SHALL BE USED NEXT TO THE LIP OF GUTTER PRIOR TO THE FINAL ASPHALT LIFT BEING PLACED. (SS-1 TACK OR PG64-22 SEAL.)

G. TACK COAT SHALL BE APPLIED PRIOR TO THE PLACEMENT OF THE FINAL LIFT OF ASPHALT IF THE EXISTING ASPHALT LIFT IS DIRTY OR AFTER TEN DAYS UNLESS OTHERWISE APPROVED. TEMPERATURE MUST BE 50°F OR HIGHER.

H. NO ASPHALT SHALL BE PLACED OVER EXCAVATED TRENCHES UNLESS TRENCHES HAVE BEEN COMPACTED AS PER VILLAGE CONSTRUCTION STANDARDS & DRAWINGS PAGE 500-2.

I. NO ASPHALT SHALL BE LAID UNLESS THE VILLAGE IS GIVEN PRIOR NOTICE AND THE AMBIENT TEMPERATURE IS 50°F OR GREATER UNLESS OTHERWISE APPROVED.

J. FINAL LIFT OF ASPHALT SHALL BE FINISHED TO 1/4" ABOVE THE LIP OF GUTTER.

K. TEMPERATURES FOR BREAKDOWN ROLLING SHALL BE 260°F PLUS 15°F AND FOR FINAL ROLLING 175°F PLUS 15°F.

L. ASPHALT CEMENT SHALL BE USED ON ALL JOINTS AND FEATHERED SURFACES PRIOR TO PLACEMENT OF THE NEXT COURSE OF ASPHALT TO THE ABUTTING JOINT, UNLESS OTHERWISE APPROVED.

M. 325°F IS THE MAXIMUM TEMPERATURE ASPHALT MATERIAL IS TO BE MIXED.

N. ALL EDGES TO BE TRIMMED BACK AND SAW CUT TO SOLID MATERIAL AND BE STRAIGHT AND NEAT AS PER THE VILLAGE'S INSTRUCTIONS.

O. AREAS TO BE PAVED, OVERLAID OR PATCHED SHALL BE CLEAN AND FREE OF DEBRIS.

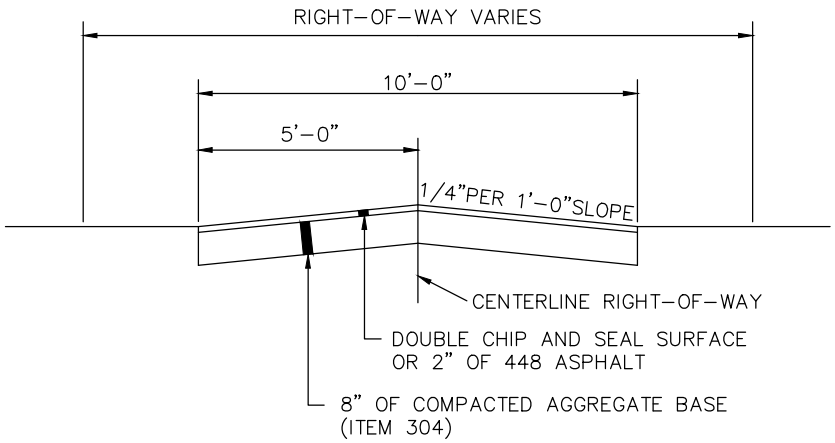

TYPICAL CROWN

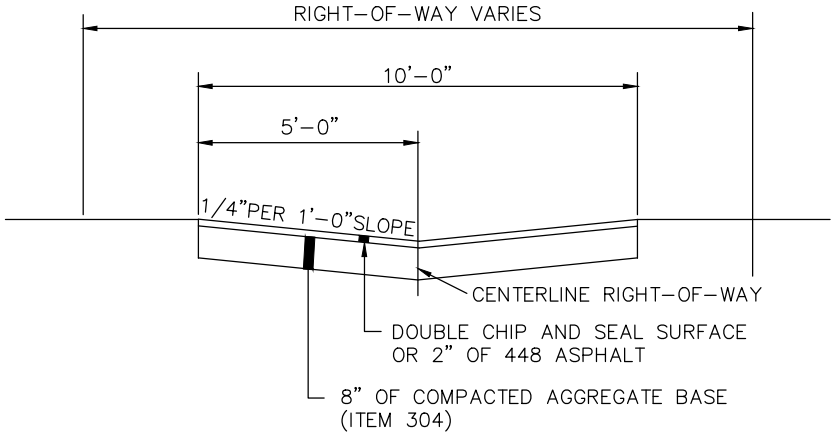

INVERTED CROWN

TYPICAL ALLEY CONSTRUCTION

A. MINIMUM STANDARD (UNLESS OTHERWISE APPROVED).

B. FOR RENOVATION OF EXISTING ALLEYS ONLY. NO NEW ALLEYS WILL BE APPROVED WITHIN THE VILLAGE.

ADJACENT PARKING AREAS SHALL BE CONNECTED TO LIMIT THE NUMBER OF ACCESS DRIVES TO THE STREET.

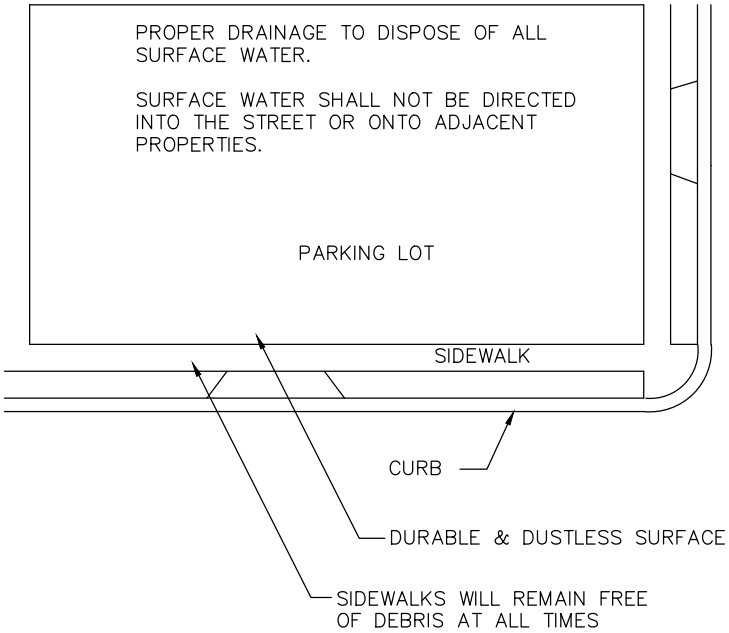

PARKING LOT DETAIL

THE FOLLOWING ARE ACCEPTED LOT SURFACES (UNLESS OTHERWISE APPROVED).

A. DOUBLE CHIP AND SEAL, WITH APPROVAL.

B. ASPHALT CONCRETE ITEM 448.

C. CONCRETE.

VILLAGE OF COVINGTON CHOICE ONE ENGINEERING	ALLEY AND PARKING LOT DETAIL	REVISIONS:	DATE APPROVED: NOV. 2003 PAGE No. 300–14

NOTES

A. A PUBLIC RIGHT-OF-WAY OPENING PERMIT TO PERFORM ANY WORK ON OR WITHIN A PUBLIC RIGHT-OF-WAY, (STREET, ALLEY, ETC.) IS REQUIRED. A PERMIT IS REQUIRED FOR ANY TUNNEL, SIDEWALK, OPENING OR EXCAVATION UNDER OR IN THE RIGHT-OF-WAY PUBLIC GROUNDS.

B. PERMIT FORMS ARE AVAILABLE FROM THE VILLAGE ADMINISTRATIVE OFFICE. THE PERMIT FORM WILL BE COMPLETED BY THE PERSON OR FIRM PLANNING THE WORK WITHIN THE RIGHT-OF-WAY. ALL APPROVALS AND FEES MUST BE OBTAINED BEFORE ANY WORK IS STARTED. 72 WORKING HOUR LEAD TIME IS RECOMMENDED.

C. THE APPLICANT SHALL HAVE SUFFICIENT BARRICADES, WARNING SIGNS, AND LIGHTS DURING THE ENTIRE PERIOD THAT THE WORK IS BEING PERFORMED AND SHALL ADHERE TO APPLICABLE SECTION OF THE OHIO MANUAL OF UNIFORM TRAFFIC CONTROL DEVICES.

D. ALL UTILITY COMPANIES ARE REQUIRED TO OBTAIN A PERMIT.

E. A PERMIT IS REQUIRED FOR WORK WHEN ACCESS IS ACROSS AN UNIMPROVED RIGHT-OF-WAY (STREET, ALLEY, ETC.)

F. A PERMIT FEE OF $25 WILL BE REQUIRED OF EACH APPLICANT.

G. WHEN ASPHALT IS LESS THAN FIVE YEARS OLD- NO PERMIT SHALL BE ISSUED BY THE VILLAGE WHICH WOULD ALLOW AN EXCAVATION OR OPENING IN A PAVED AND IMPROVED STREET SURFACE LESS THAN FIVE YEARS OLD UNLESS THE APPLICANT CAN CLEARLY DEMONSTRATE THAT PUBLIC HEALTH OR SAFETY REQUIRES THAT THE PROPOSED WORK BE PERMITTED OR UNLESS AN EMERGENCY CONDITION EXISTS. A PERMIT FEE OF $10,000 WILL BE REQUIRED BEFORE A STREET EXCAVATION WILL BE ALLOWED. HOWEVER, THE VILLAGE RESERVES THE RIGHT TO WAIVE THIS FEE UNDER AN EMERGENCY OR ANY OTHER CONDITION.

H. THE EXISTING PAVEMENT SHALL BE NEATLY CUT PRIOR TO EXCAVATION. ALL EXCAVATED MATERIAL SHALL BE REMOVED FROM THE JOB SITE. THE APPLICANT IS RESPONSIBLE FOR ALL PAVEMENT DAMAGED OUTSIDE THE TRENCH AREA.

I. EXCAVATION AND BACKFILLING OPERATION SHALL BE IN ACCORDANCE WITH VILLAGE CONSTRUCTION STANDARDS AND DRAWINGS 600-8, 800-4, AND 900-4.

J. THE VILLAGE MAY WAIVE TESTING REQUIREMENTS FOR ALL EXCAVATIONS IN ALLEYS OR STONE AREAS THAT ARE BACKFILLED WITH ODOT 603 TYPE 1 OR TYPE 2 GRANULAR MATERIAL, COMPACTED IN 6" LAYERS.

K. ALL DISTURBED AREAS MUST BE RETURNED TO AS GOOD OR BETTER CONDITION. ALL REPAIRS MUST MEET VILLAGE SPECIFICATIONS. THE VILLAGE MUST INSPECT AND APPROVE ALL REPAIRS. THE BOND WILL BE RETURNED AFTER ALL REPAIRS ARE APPROVED. WHERE SETTLING COULD OCCUR, THE BOND MAY BE HELD FOR ONE YEAR.

L. COLD PATCH SHALL BE PLACED TO 1 1/2"+ THICKNESS OVER BACKFILLED TRENCH WITHIN ONE WORKING DAY AFTER THE BACKFILL HAS BEEN COMPACTED, IF THE ASPHALT PAVEMENT ISN'T PLACED IMMEDIATELY.

EXAMPLE "A"

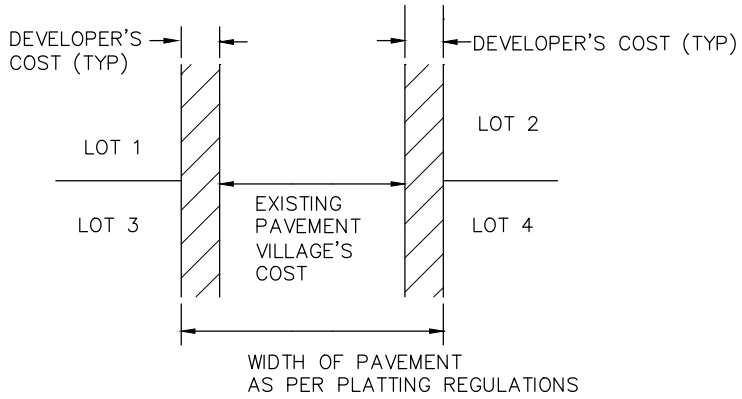

STREET IMPROVEMENTS FROM EXISTING STREET WIDTH TO PLATTING REGULATION WIDTH

EXAMPLE "B"

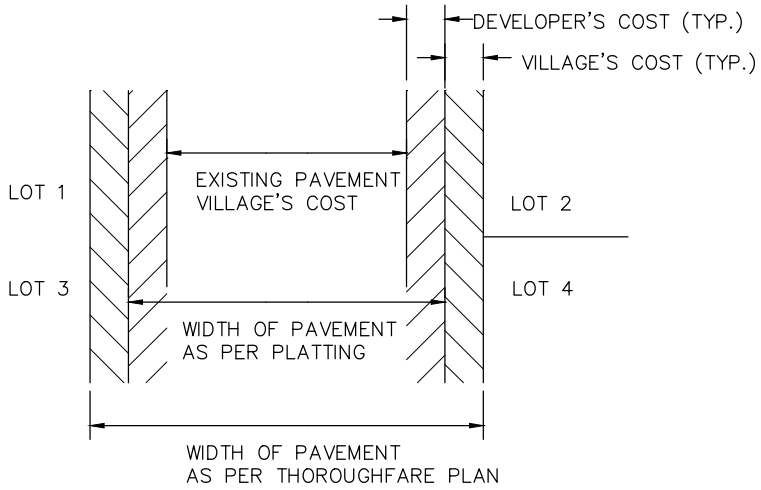

STREET IMPROVEMENTS FROM EXISTING STREET WIDTH TO THOROUGHFARE PLAN WIDTH

NOTES

A. IF BOTH SIDES OF A STREET ARE INCLUDED IN THE SUBDIVISION, THE DEVELOPER PAYS THE TOTAL COST FOR ADDITIONAL WIDTH OF EXCAVATION, PAVEMENT, CURB AND SIDEWALK INCLUDING COST TO BRING THE STORM SEWER SYSTEM UP TO STANDARDS.

B. IF ONE SIDE OF THE SUBDIVISION ABUTS AN EXISTING STREET, THE DEVELOPER SHALL PAY FOR THE TOTAL COST OF ONE SIDE FOR ADDITIONAL WIDTH OF EXCAVATION, PAVEMENT, CURB AND SIDEWALK INCLUDING COST TO BRING THE STORM SEWER SYSTEM UP TO STANDARDS.

C. THE VILLAGE PAYS CONSTRUCTION COST ON EXISTING STREET WIDTH AND ANY OVERSIZING TO MEET THOROUGHFARE PLAN.

VILLAGE OF COVINGTON CHOICE ONE ENGINEERING	STREET IMPROVEMENT CONDITIONS	REVISIONS:	DATE APPROVED: NOV. 2003 PAGE No. 300–16

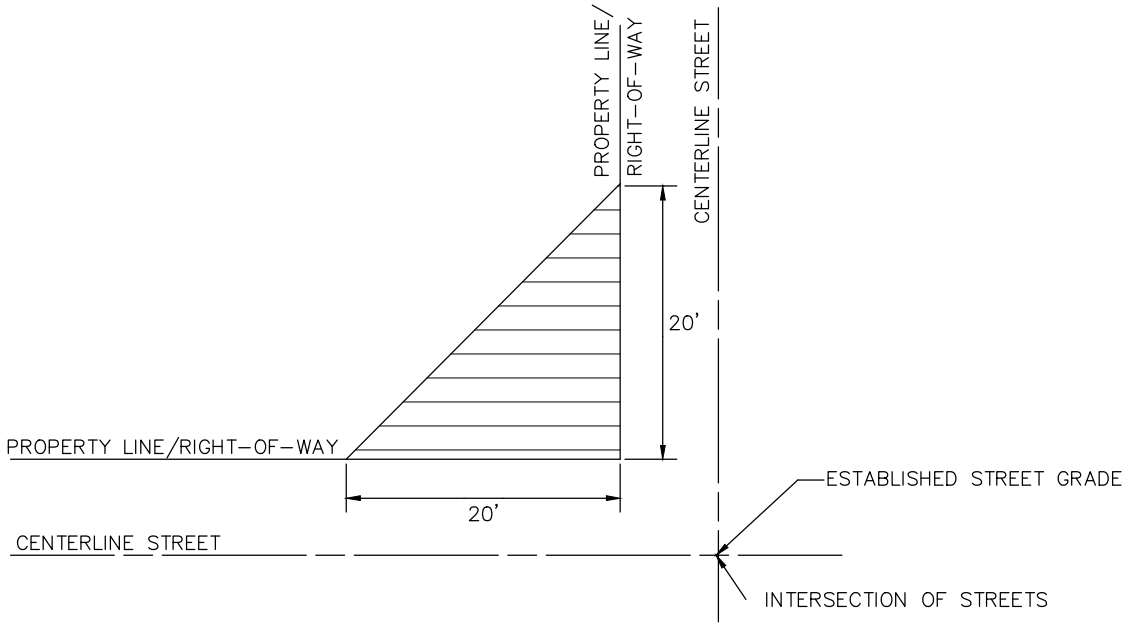

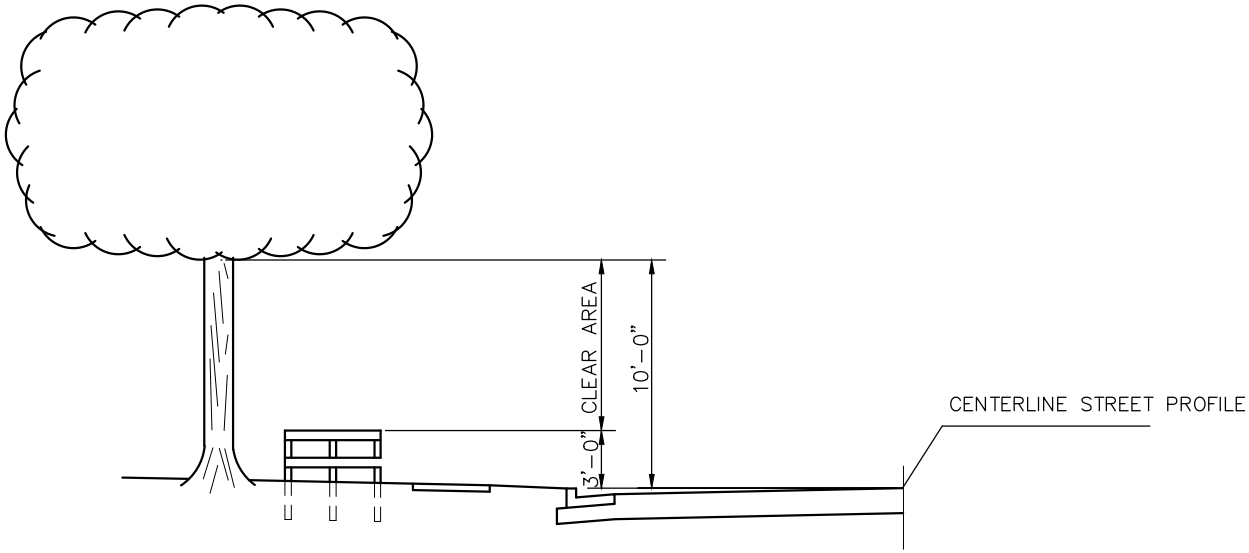

VISION CLEARANCE EXHIBIT

NOTES

THERE SHALL BE NOTHING ABOVE 3' OR BELOW 10' OF THE ESTABLISHED STREET GRADE IN THE TRIANGULAR SHADED AREA.

VILLAGE OF COVINGTON CHOICE ONE ENGINEERING	VISION CLEARANCE ON CORNER LOTS	REVISIONS:	DATE APPROVED: NOV. 2003 PAGE No. 300-17

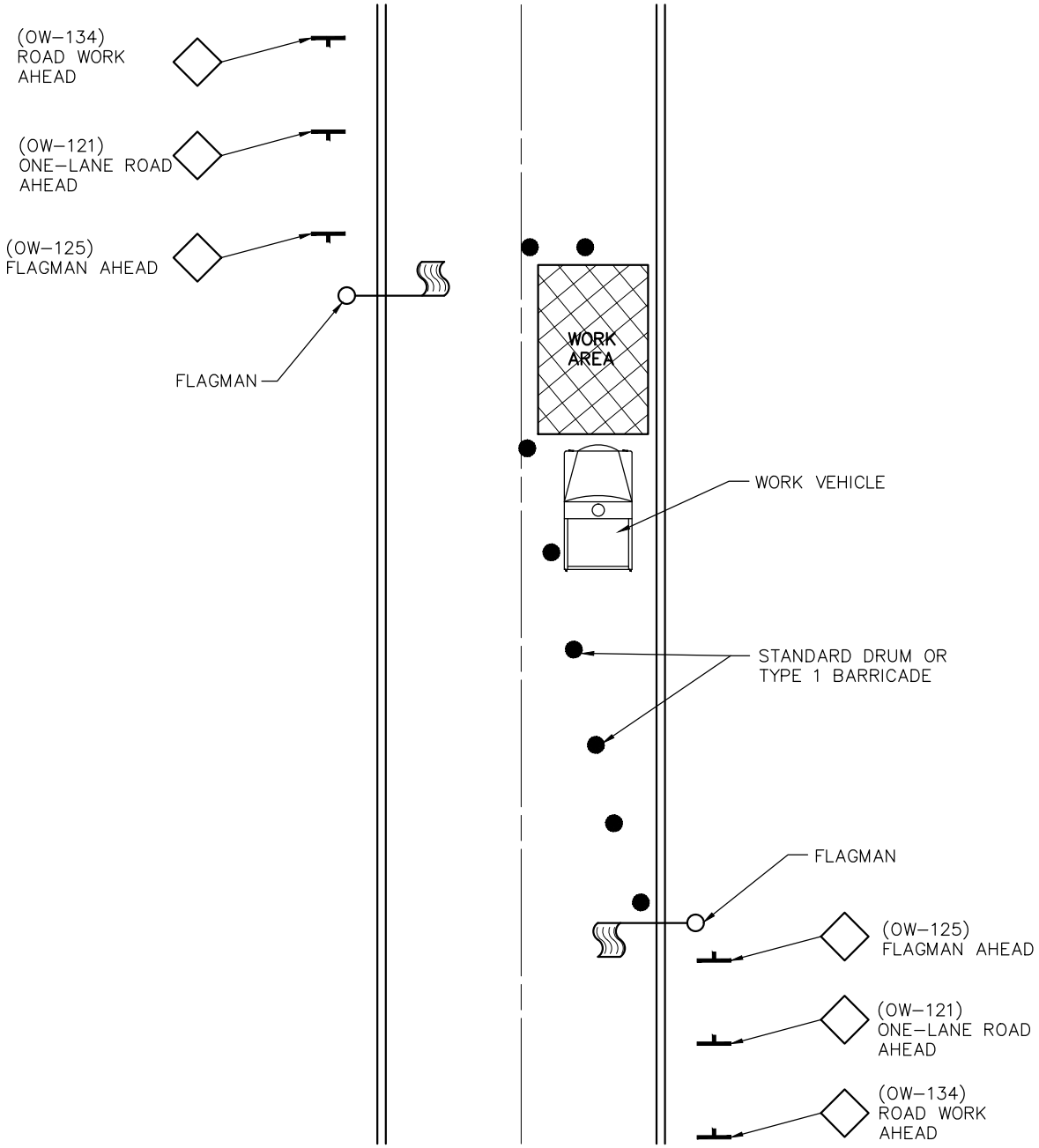

NOTES

A. THE POLICE AND FIRE DEPARTMENTS SHALL BE NOTIFIED 24 HOURS IN ADVANCE OF ANY CONSTRUCTION. NO STREET SHALL BE CLOSED WITHOUT THE APPROVAL OF THE VILLAGE.

B. IF THE WORK IS TO COVER THE ENTIRE WIDTH OF THE STREET, ONE HALF OF THE STREET SHALL BE MAINTAINED FOR TRAFFIC WHILE ONE HALF OF THE STREET IS REPAIRED.

C. BARRICADE DISTANCE AND SEPARATION OF WARNING TO BE SPACED AS PER JOB SITE ACCORDING TO THE VILLAGE.

D. IF BARRICADES ARE TO BE LEFT UP OVERNIGHT, WARNING LIGHTS (FLASHERS) ARE TO BE USED.

E. ALL STREET CONTROL DEVICES APPLICABLE TO DIFFERENT WIDTH STREETS, TYPE OF CONSTRUCTION, ETC., SHALL CONFORM TO THE LATEST REVISION OF THE OHIO MANUAL OF UNIFORM TRAFFIC CONTROL DEVICES, UNLESS OTHERWISE APPROVED BY THE VILLAGE AND SHALL BE IN PLACE AND PROPERLY DISPLAYED PRIOR TO THE COMMENCEMENT OF ANY WORK.

VILLAGE OF COVINGTON CHOICE ONE ENGINEERING	**TRAFFIC CONTROL DEVICES** **STATIONARY OPERATIONS IN ONE LANE**	REVISIONS:	DATE APPROVED: NOV. 2003 PAGE No. 300–18

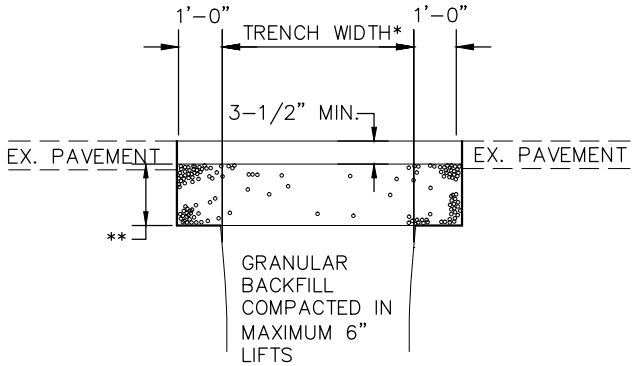

* MIN. 18" WIDTH IF ASPHALT BACKFILL IS USED IN THE REPAIR.

** CONCRETE OR 301 ASPHALT AGGREGATE BASE TO MATCH EXISTING CONDITION.

TYPICAL PAVEMENT RESTORATION DETAIL

TYPICAL PAVEMENT RESTORATION NOTES

MINIMUM GRAVEL PAVEMENT REPLACEMENT
2" OF ODOT #67 ON
12" OF ODOT ITEM 304, IN LIFTS OF 3" MAXIMUM

MINIMUM ASPHALT PAVEMENT REPLACEMENT
PERMANENT PAVEMENT REPLACEMENT SHALL EQUAL OR EXCEED THE EXISTING PAVEMENT COMPOSITION. (MINIMUM PAVEMENT COMPOSITION SEE PAGE 300-2 UTILIZING APPROPRIATE STREET CLASSIFICATION).

SOIL BORINGS SHALL BE CAPPED WITH A MINIMUM OF 9" OF ODOT CLASS C CONCRETE.