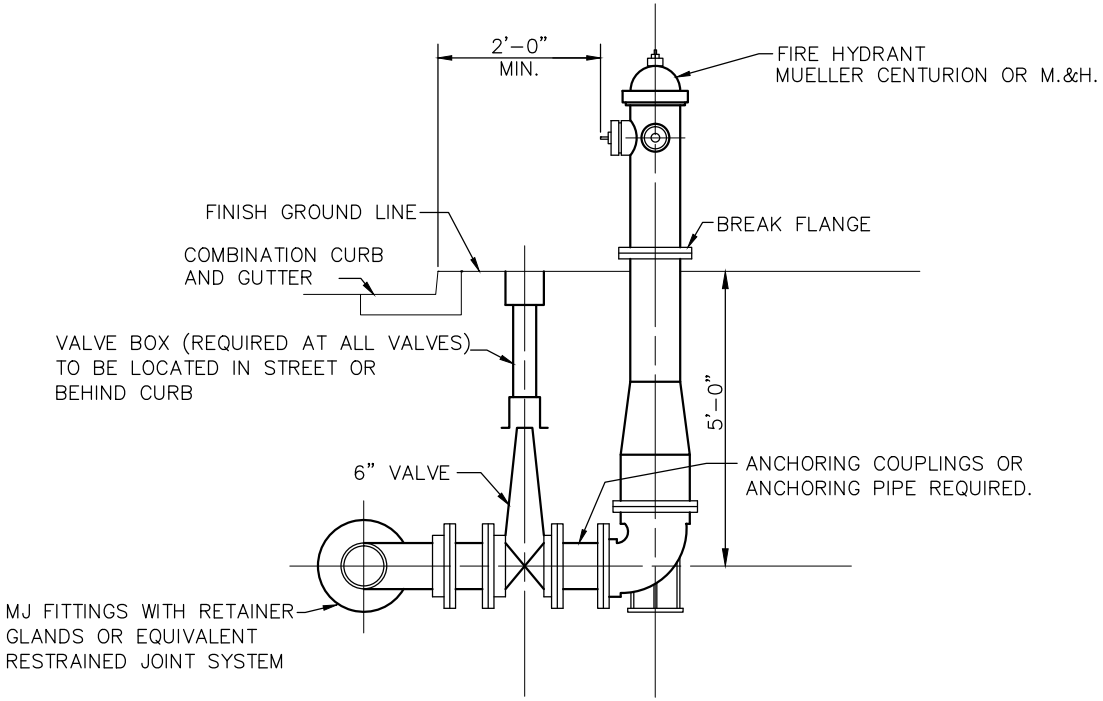

SECTION VIEW

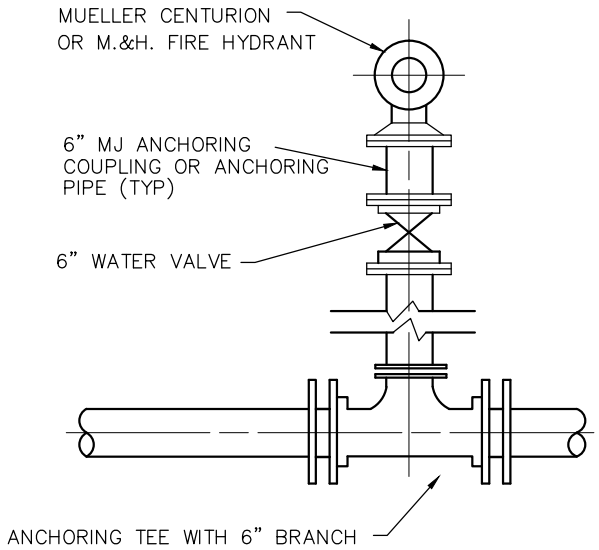

BASIC TEE DETAIL PLAN

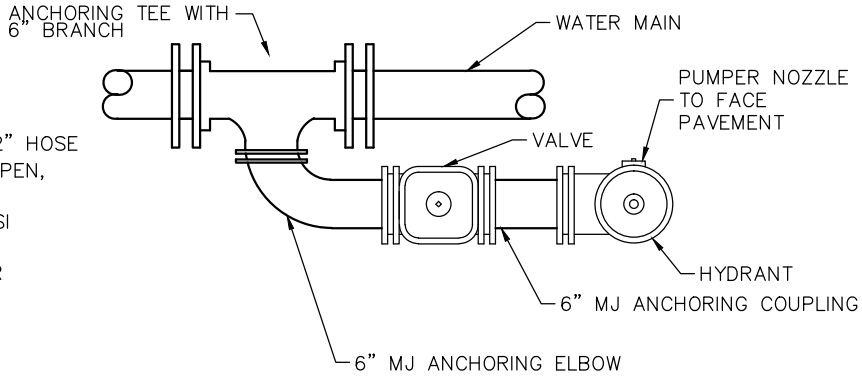

SPECIAL MECHANICAL JOINT
HYDRANT TEE DETAIL PLAN

NOTES

A. FIRE HYDRANTS SHALL BE MUELLER CENTURION OR M.&H., A-423, MECHANICAL JOINT, WITH (2) 2-1/2" HOSE NOZZLES, (1) 4 1/2" PUMPER NOZZLE, NATIONAL STANDARDS THREADS CONFORMING TO AWWA CCW TO OPEN, BREAK FLANGES 3" ABOVE GRADE.
B. GATE VALVES SHALL BE AWWA C-509, RESILIENT WEDGE, NONRISING STEM, MECHANICAL JOINT, 150 PSI WORKING PRESSURE, CCW TO OPEN WITH ARROW INDICATING OPEN DIRECTION, MUELLER OR EQUIVALENT.
C. VALVE BOXES SHALL BE 3-PIECE CAST IRON 6" DIAMETER NOMINAL, ADJUSTABLE SCREW TYPE, COVER MARKED "WATER", DOMESTIC MADE ONLY.
D. ALL FITTINGS TO BE RESTRAINED.
E. ALL FITTINGS TO BE AWWA C-153 DUCTILE IRON, COMPACT.
F. ALL VALVES AND HYDRANTS SHALL OPEN LEFT BY TURNING IN A COUNTERCLOCKWISE DIRECTION.
G. CONTRACTOR TO FACE HYDRANT AS REQUIRED BY THE VILLAGE.
H. WATER MAIN SHALL BE AWWA C-151 DUCTILE IRON PIPE CLASS 350, OR C 909 CL 150 SLIP-ON JOINTS WITH RUBBER GASKETS, FOR ALL PIPE UP THROUGH 12". MEGALUG RESTRAINS OR EQUIVALENT.
I. THE LAYING OF PIPE ON EXISTING DIRT WITH THE BELLS CUT OUT, SHALL NOT BE PERMITTED.
J. THE OPEN ENDS OF ALL PIPES AND SPECIAL CASTINGS SHALL BE PLUGGED OR OTHERWISE CLOSED WITH A WATERTIGHT PLUG TO THE APPROVAL OF THE VILLAGE BEFORE LEAVING THE WORK FOR THE NIGHT.

VILLAGE OF COVINGTON CHOICE ONE ENGINEERING	FIRE HYDRANT	REVISIONS: 10-4-2012	DATE APPROVED: NOV. 2003 PAGE No. 800-1

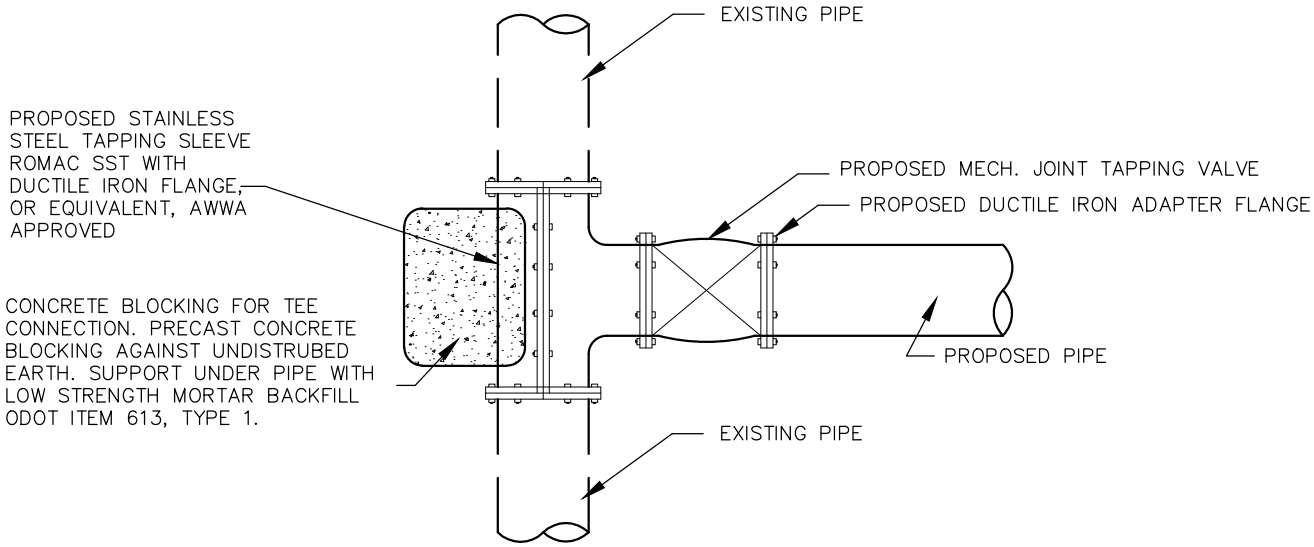

TAPPING SLEEVE AND VALVE DETAIL

NOTES

A. BELL JOINT RESTRAINTS – FOR DIP, USE FIELD LOCK BY U.S. PIPE OR APPROVED EQUIVALENT.

B. MECHANICAL JOINT RESTRAINTS – EBAA IRON MEGALUG RETAINER GLAND OR EQUIVALENT.

C. CONTRACTOR TO USE RESTRAINED JOINTS UNLESS THRUST BLOCKING IS PREAPPROVED FOR SPECIAL CONDITIONS BY THE VILLAGE PRIOR TO THE BEGINNING OF CONSTRUCTION.

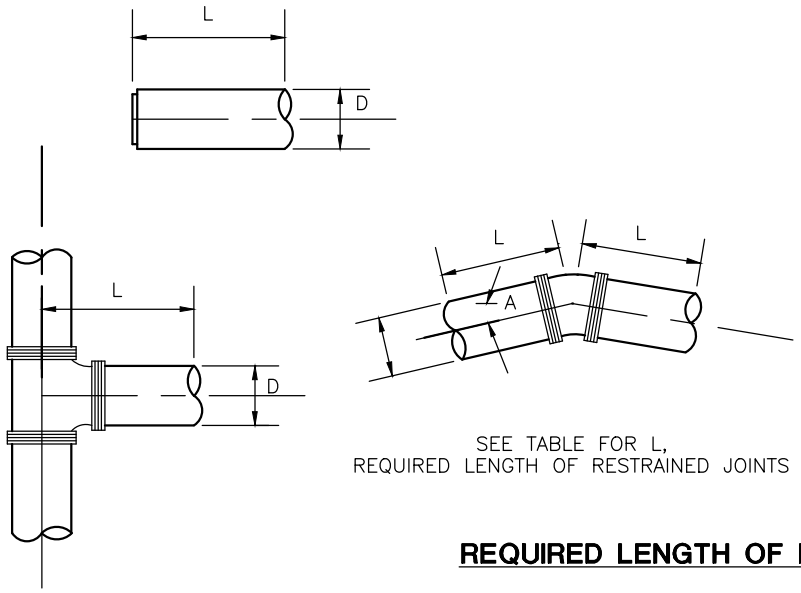

SEE TABLE FOR L,
REQUIRED LENGTH OF RESTRAINED JOINTS

REQUIRED LENGTH OF RESTRAINED JOINTS IN FEET									
D–DIAMETER OF PIPE									
A ~ DEGREE OF DEFLECTION		4"	6"	8"	10"	12"	16"	20"	24"
	11 1/4°	*	*	*	*	*	5	5	6
	22 1/2°	*	2	3	5	6	8	10	12
	45°	4	8	12	14	20	30	36	45
	90°	12	26	38	48	66	98	125	145
	TEE	12	26	38	48	66	98	125	145
	END	12	26	38	48	66	98	125	145

*REQUIRED RESTRAINED JOINT AT FITTING AND ONE BELL JOINT FROM FITTING MINIMUM.

REQUIRED LENGTH OF RESTRAINED JOINTS FOR WATER MAINS

DESIGN PARAMETERS

LAYING CONDITIONS – TYPE 5
SOIL DESIGNATION – SILT
DEPTH OF COVER – 4'
DESIGN PRESSURE – 80 PSI
SAFETY FACTOR – 1.50
POLYWRAPPED PIPE
IF WORST CONDITIONS EXIST, ADDITIONAL RESTRAINTS WILL BE NECESSARY.

VILLAGE OF COVINGTON CHOICE ONE ENGINEERING	RESTRAINING JOINTS AND TAPPING SLEEVE FOR WATER MAINS	REVISIONS:	DATE APPROVED: NOV. 2003 PAGE No. 800–2

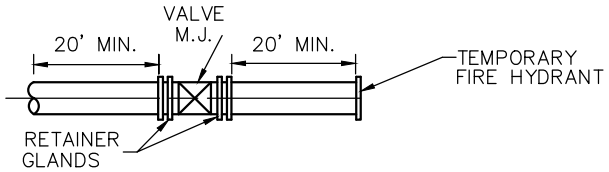

DETAIL - END OF WATER LINE

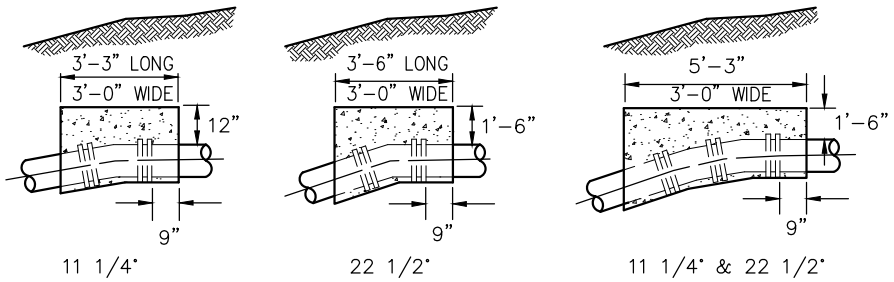

CONCRETE BLOCKING FOR VERTICAL BENDS

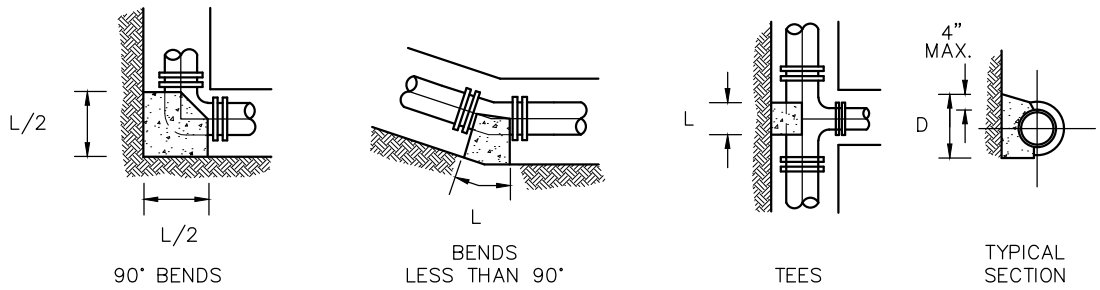

CONCRETE BLOCKING FOR HORIZONTAL BENDS

BENDS

SIZE OF PIPE	DEGREE OF BEND							
	11 1/4°		22 1/2°		45°		90°	
	L	D	L	D	L	D	L	D
3", 4", 6"	8"	6"	10"	6"	20"	6"	36"	6"
8"	9"	8"	14"	8"	24"	9"	50"	8"
12"	14"	12"	22"	12"	30"	16"	60"	15"
16"	18"	16"	24"	18"	33"	36"	70"	22"

TEES

RUN	BRANCH							
	3",4",6"		8"		12"		16"	
	L	D	L	D	L	D	L	D
3", 4", 6"	16"	6"						
8"	14"	8"	18"	12'				
12"	9"	12"	18"	12"	24"	18"		
16"	8"	16"	14"	16"	28"	16"	30"	26"

NOTES

A. CARE SHALL BE TAKEN TO KEEP CONCRETE AWAY FROM MECHANICAL JOINTS BY PLACING VISQUEEN OR OTHER APPROVED MATERIAL OVER PIPE BEFORE PLACING OF CONCRETE. BOLTS SHALL NOT BE ENCASED IN CONCRETE.

B. CONCRETE FOR BLOCKING VALVES AND FITTINGS SHALL CONFORM TO SECTION ODOT 499 CLASS C.

C. CONTRACTOR SHALL USE THE THRUST BLOCKS AS SHOWN ONLY IF PREAPPROVED FOR SPECIAL CONDITION BY THE VILLAGE PRIOR TO BEGINNING CONSTRUCTION AND IT IS DISCOURAGED.

VILLAGE OF COVINGTON CHOICE ONE ENGINEERING	CONCRETE BLOCKING FOR WATER MAINS	REVISIONS:	DATE APPROVED: NOV. 2003 PAGE No. 800-3

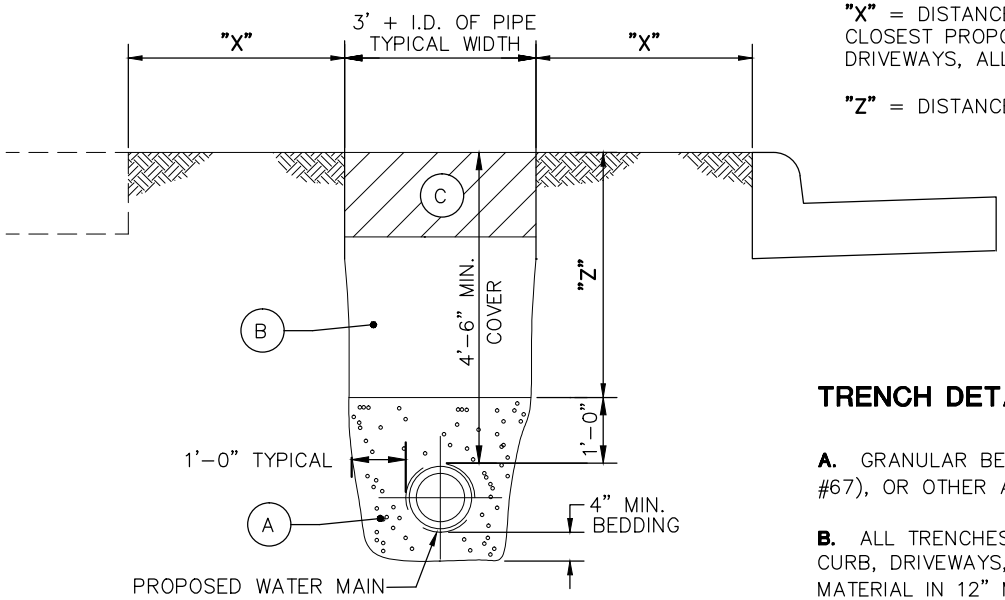

"X" = DISTANCE FROM EDGE OF TRENCH TO EDGE OF CLOSEST PROPOSED OR EXISTING PAVEMENT, CURB, DRIVEWAYS, ALLEYS, STONE AREA OR WALKS.

"Z" = DISTANCE FROM TOP OF BEDDING TO FINISH SURFACE.

WATER MAIN TRENCH DETAIL

WATER MAIN CROSSING SEPARATION

WHENEVER A SANITARY SEWER AND WATER LINE MUST CROSS, THE SEWER SHALL BE LAID AT SUCH AN ELEVATION THAT THE CROWN OF THE SEWER IS AT LEAST 18 INCHES BELOW THE BOTTOM OF THE WATER LINE. IF IT IS ABSOLUTELY IMPOSSIBLE TO MAINTAIN THE 18-INCH VERTICAL SEPARATION, THE SANITARY SEWER SHALL BE CONSTRUCTED WITH WATER LINE TYPE MATERIALS WHICH WILL WITHSTAND A 50 PSI PRESSURE TEST. THESE REQUIREMENTS WILL EXTEND FOR A DISTANCE OF 10 FEET, MEASURED PERPENDICULAR, ON BOTH SIDES OF THE WATER LINE.

AT CROSSINGS, THE WATER MAIN SHALL HAVE A MINIMUM VERTICAL DISTANCE OF 18-INCHES FROM STORM AND SANITARY SEWERS. ALSO ONE FULL LENGTH OF WATER MAIN SHALL BE LOCATED SO THE JOINTS ARE AS FAR FROM THE STORM SANITARY SEWERS AS POSSIBLE.

TRENCH DETAIL NOTES

A. GRANULAR BEDDING SHALL BE WASHED GRAVEL (NO LIMESTONE), ODOT 603 TYPE 3 (#57 OR #67), OR OTHER APPROVED EQUIVALENT.

B. ALL TRENCHES WHERE "X" IS GREATER THAN "Z" FROM PROPOSED OR EXISTING PAVEMENT, CURB, DRIVEWAYS, ALLEYS, STONE AREA OR WALKS CAN BE COMPACTED EXISTING NATIVE MATERIAL IN 12" MAXIMUM LIFTS OR AS APPROVED BY THE VILLAGE. NO MATERIAL SHALL BE USED FOR BACKFILLING THAT CONTAINS STONES, ROCKS, PAVEMENT ETC., GREATER THAN 4" DIAMETER.

ALL TRENCHES WHERE "Z" IS GREATER THAN "X" FROM PROPOSED OR EXISTING PAVEMENT, CURB, DRIVEWAYS, ALLEYS, STONE AREA OR WALKS SHALL BE COMPACTED WITH GRANULAR BACKFILL MATERIAL ODOT 603 TYPE 1 OR TYPE 2, IN 6" MAXIMUM LIFTS OR LOW STRENGTH MORTAR BACKFILL ODOT ITEM 613 TYPE 1 UNTIL THE TOP OF THE COMPACTED GRANULAR BACKFILL OR LOW STRENGTH MORTAR BACKFILL IS HIGH ENOUGH WHERE "X" IS GREATER THAN "Z".

A DENSITY TEST (12" IN PAVEMENT, 24" OFF PAVEMENT) ON GRANULAR BACKFILL OF 98% OF ASTM D698 STANDARD PROCTOR CURVE MAY BE REQUIRED TO BE PERFORMED BY A COMMERCIAL TESTING LAB SATISFACTORY TO THE VILLAGE. ALSO ALTERNATE COMPACTION USEAGE OF WATER JETTING PROBING EVERY 2 FEET WITHIN THE TRENCH WILL BE ACCEPTABLE WITH PROPER APPROVAL.

C. OFF-PAVEMENT AREAS SHALL BE PROVIDED WITH A MINIMUM OF 6" OF TOPSOIL OVER THE COMPACTED MATERIAL AND THEN SEEDED AND MULCHED PER ODOT ITEM 659.

IN-PAVEMENT AREAS SHALL FOLLOW TYPICAL PAVEMENT RESTORATION DETAILS SHOWN ON PAGE 300-19.

D. THE OPEN ENDS OF ALL PIPES SHALL BE PLUGGED TO THE APPROVAL OF THE VILLAGE BEFORE LEAVING THE WORK FOR THE NIGHT.

MATERIAL SPECIFICATIONS

A. WATER MAIN SHALL BE AWWA C-151 DUCTILE IRON PIPE CLASS 350, OR C 909 CL 150 SLIP-ON JOINTS WITH RUBBER GASKETS, FOR ALL PIPE UP THROUGH 12".

B. BELL JOINT RESTRAINTS – FOR DIP, USE FIELD LOCK BY US PIPE OR APPROVED EQUIVALENT.

C. MECHANICAL JOINT RESTRAINTS – EBAA IRON MEGALUG RETAINER GLAND OR EQUIVALENT.

D. FIRE HYDRANTS – MUELLER CENTURION OR M.&H., A-423, MECHANICAL JOINT, WITH (2) 2 1/2" HOSE NOZZLES, (1) 4 1/2" PUMPER NOZZLE NATIONAL STANDARDS THREADS CONFORMING TO AWWA, CCW TO OPEN, BREAK FLANGES 3" ABOVE GRADE.

E. GATE VALVES – AWWA C-509, RESILIENT WEDGE, NON-RISING STEM, MECHANICAL JOINT, 150 PSI WORKING PRESSURE, CCW TO OPEN, WITH ARROW INDICATING OPEN DIRECTION.

F. VALVE BOXES – 3-PIECE CAST IRON 6" DIAMETER NOMINAL, ADJUSTABLE SCREW TYPE, COVER MARKED "WATER", DOMESTIC MADE ONLY.

G. SERVICE LINE – TYPE K COPPER TUBE WITH COMPRESSION TYPE FITTINGS OR SDR-9 200 psi BLUE.

H. CURB STOP – BRASS CONFORMING TO AWWA C-800. MUELLER B25155N OR EQUAL. **NO LEAD**

I. CURB BOXES – 4'-6" BURY MINNEAPOLIS PATTERN MUELLER CO. #H10300-08N.

J. SERVICE CONNECTIONS WILL NOT BE MADE WITHOUT THE INSTALLATION OF A METER.

K. ALL DUCTILE IRON PIPE, DUCTILE IRON FITTINGS AND BURIED BARREL OF FIRE HYDRANTS SHALL BE WRAPPED WITH 8mil POLYWRAP AS MANUFACTURED BY TRUMBALL INDUSTRIES.

L. SADDLES MUST BE USED FOR ALL TAPS INTO PVC MAINS.

M. SERVICES OF 1" OR SMALLER REQUIRE A BALL VALVE INSIDE THE FOUNDATION PRIOR TO ANY FITTINGS, GATE VALVE ON SERVICES 1½" AND LARGER.

HYDROSTATIC TEST

A. AFTER THE PIPE HAS BEEN LAID AND BACKFILLED, ALL NEWLY LAID PIPE OR VALVED SECTION, SHALL BE SUBJECTED TO HYDROSTATIC PRESSURE AND LEAKAGE TEST. ALL WATER MAINS MUST BE HYDROSTATICALLY TESTED (AWWA C-600). THE TESTS MUST BE PERFORMED IN THE PRESENCE OF A REPRESENTATIVE OF THE VILLAGE. THE LEAKAGE TEST PRESSURE SHALL BE NOT LESS THAN 150 PSI. THE DURATION OF THE LEAKAGE TEST SHALL NOT BE LESS THAN 2 HOURS. HYDROSTATIC PRESSURE SHALL BE APPLIED BY MEANS OF A PUMP TAKING WATER FROM AN AUXILIARY SUPPLY. ALL PIPING MUST BE PROPERLY FILLED AND FLUSHED TO DISPEL ALL AIR BEFORE THE TEST IS MADE USING POTABLE WATER.

B. LEAKAGE IS DEFINED AS THE QUANTITY OF WATER TO BE SUPPLIED INTO THE NEWLY LAID PIPE, OR ANY VALVED SECTION THEREOF, NECESSARY TO MAINTAIN THE SPECIFIED LEAKAGE TEST PRESSURE AFTER THE PIPE HAS BEEN FILLED WITH WATER AND THE AIR EXPELLED.

C. NO PIPE INSTALLATION WILL BE ACCEPTED IF THE LEAKAGE EXCEEDS THE LEAKAGE DETERMINED BY THE FOLLOWING FORMULA:

$$L = \frac{n \quad D \quad \sqrt{P}}{7400}$$

WHERE: n = NUMBER OF PIPE JOINTS
D = PIPE DIAMETER
P = TEST PRESSURE
L = ALLOWABLE LEAKAGE PER HOUR

THE FOLLOWING TABLE REPRESENTS THE ALLOWABLE LEAKAGE IN GALLONS PER HOUR.

D. DURING THE HYDROSTATIC TEST, A THOROUGH EXAMINATION OF ALL PIPING, FITTINGS, VALVES, HYDRANTS, ETC. SHALL BE PERFORMED. LEAKING JOINTS SHALL BE TIGHTENED AND CRACKED OR OTHERWISE DEFECTIVE MATERIAL SHALL BE REMOVED AND REPLACED AND THE TEST SHALL BE REPEATED UNTIL SATISFACTORY RESULTS ARE OBTAINED. SERVICE LINES TESTED AT 90LBS AIR FOR 5 MINUTES.

DISINFECTION

A. AFTER SATISFACTORY HYDROSTATIC TESTING, THE COMPLETED WATER WORK SHALL BE DISINFECTED IN ACCORDANCE WITH AWWA C-651.

B. MAINTAIN PIPES FREE OF DIRT AND FOREIGN MATTER DURING CONSTRUCTION BY DEWATERING TRENCH AND SEALING OPEN PIPE BARRELS. SWAB EACH LENGTH OF PIPE AS IT IS INSTALLED. UPON COMPLETION OF MAIN, ISOLATE MAIN SEGMENTS AND FLUSH PIPE AT 2 FPS VELOCITY.

C. STERILIZE MAIN IN ACCORDANCE WITH AWWA C-651. INJECT 3% TO 5% HYPOCHLORITE SOLUTION TO PROVIDE 50 TO 60 MG PER LITER CONCENTRATION IN MAIN. CHLORINE MAY BE PLACED IN EACH SECTION OF PIPE AT THE TIME OF INSTALLATION. SAMPLE WATER AT EACH HYDRANT OR IF NO HYDRANT IS AVAILABLE, AT A TAP IN THE PROPOSED LINE. ANALYZE SAMPLE USING D.P.D. REAGENT TO VERIFY FREE CHLORINE CONCENTRATION. MAINTAIN CONCENTRATION IN MAIN FOR 24 HOURS. SAMPLE HYDRANTS AT COMPLETION OF STERILIZATION VERIFYING MINIMUM CHLORINE RESIDUAL OF 20 MG PER LITER.

D. FLUSH CHLORINE SOLUTION TO WASTE INTO SANITARY SEWER AT A CONTROLLED RATE, NOT TO EXCEED 25 GPM. IF CHLORINE RESIDUAL DROPS IN 10 MG PER LITER, FLUSH MAIN AT 2 FPS AND REPEAT STERILIZATION PROCEDURE.

E. WATER SAMPLES – PERFORM BACTERIOLOGICAL TEST PER AWWA C-651. SAMPLE MAIN AT A TAP IN THE PROPOSED LINE. DELIVER SAMPLE TO STATE CERTIFIED LABORATORY. DELIVER COPIES OF LABORATORY REPORT TO THE VILLAGE IN THE EVENT OF DETECTION OF COLIFORM ORGANISM, REPEAT FLUSHINGS, STERILIZATION, AND SAMPLING OF MAINS UNTIL ACCEPTABLE TEST RESULTS ARE ACHIEVED. THIS IS TO BE PERFORMED PRIOR TO TRANSFER OF SERVICE.

ALLOWABLE LEAKAGE PER 1000 FT. (305M) OF PIPELINE (GPH+)

AVG. TEST PRESSURE (PSI) BAR	NOMINAL PIPE DIAMETER– INCHES											
	3	4	6	8	10	12	14	16	18	20	24	30
450(31)	0.48	0.64	0.95	1.27	1.59	1.91	2.23	2.55	2.87	3.18	3.82	4.78
400(28)	0.45	0.60	0.90	1.20	1.50	1.80	2.10	2.40	2.70	3.00	3.60	4.50
350(24)	0.42	0.56	0.84	1.12	1.40	1.69	1.97	2.25	2.53	2.81	3.37	4.21
300(21)	0.39	0.52	0.78	1.04	1.30	1.56	1.82	2.08	2.34	2.60	3.12	3.90
275(19)	0.37	0.50	0.75	1.00	1.24	1.49	1.74	1.99	2.24	2.49	2.99	3.73
250(17)	0.36	0.47	0.71	0.95	1.19	1.42	1.66	1.90	2.14	2.37	2.85	3.56
225(16)	0.34	0.45	0.68	0.90	1.13	1.35	1.58	1.80	2.03	2.25	2.70	3.38
200(14)	0.32	0.43	0.64	0.85	1.06	1.28	1.48	1.70	1.91	2.12	2.55	3.19
175(12)	0.30	0.40	0.59	0.80	0.99	1.19	1.39	1.59	1.79	1.98	2.38	2.98
150(10)	0.28	0.37	0.55	0.74	0.92	1.10	1.29	1.47	1.66	1.84	2.21	2.76
120(9)	0.25	0.34	0.50	0.67	0.84	1.01	1.18	1.34	1.51	1.68	2.01	2.52

NOTES

A. NO WORK SHALL BE APPROVED OR ACCEPTED BY THE VILLAGE UNLESS 2 WORKING DAYS NOTICE OF COMMENCING WORK IS GIVEN TO THE VILLAGE.

B. ALL TEMPORARY PAVEMENT AND SIDEWALK SHALL BE MAINTAINED BY THE CONTRACTOR OR THE DEVELOPER AT HIS OWN EXPENSE IN A SUITABLE AND SAFE CONDITION FOR TRAFFIC UNTIL PERMANENT REPLACEMENT IS MADE OR THE PROJECT IS FINALLY ACCEPTED BY THE VILLAGE, UNLESS OTHERWISE APPROVED.

C. THE MINIMUM LENGTH OF PIPE NIPPLES SHALL BE 18" UNLESS OTHERWISE APPROVED BY THE VILLAGE.

D. ALL CUSTOMERS SHALL MEET BACKFLOW PREVENTION REQUIREMENTS AS PER VILLAGE OF COVINGTON STANDARDS.

E. ALL WATERLINE CONSTRUCTION INCLUDING EXTENSIONS ON PRIVATE PROPERTY SHALL FOLLOW THE VILLAGE STANDARDS, ODOT ITEM 638, AND AWWA STANDARDS WHICHEVER IS MORE RESTRICTIVE AS DETERMINED BY THE VILLAGE.

F. OPERATION OF VILLAGE FIRE HYDRANTS, VALVES, METERS, SERVICES, STOPS, AND ALL OTHER MECHANICAL INFRASTRUCTURE ITEMS IS STRICTLY PROHIBITED.

G. ALL WATER MAINS SHALL HAVE A MINIMUM DEPTH OF 4'-6" AND A MAXIMUM DEPTH OF 6'-0" FROM TOP OF PIPE TO SURFACE, UNLESS REQUIRED BY DESIGN.

PIPE

A. ALL PIPE FITTINGS SHALL BE DUCTILE IRON.

B.

WATER MAIN MINIMUM SIZE UNLESS OTHERWISE APPROVED	
RESIDENTIAL	8"
COMMERCIAL	10"
INDUSTRIAL	12"
6" MAY BE CONSIDERED FOR LOOPING PURPOSES IN RESIDENTIAL AREAS AND THE USE OF A FIRE LINE	

C. DEADENDS ARE NOT PERMITTED AND MUST BE LOOPED UNLESS THEY ARE DEEMED UNPRACTICAL BY THE VILLAGE AFTER A REVIEW OF A WATER MAIN DESIGN. WHEN APPROVED, THEY SHALL BE TERMINATED WITH A FIRE HYDRANT AT THE END.

EXCAVATION AND PIPE LAYING

A. THE OPEN ENDS OF ALL PIPES SHALL BE CLOSED WITH A WATERTIGHT PLUG TO THE APPROVAL OF THE VILLAGE BEFORE LEAVING THE WORK FOR THE NIGHT AND AT OTHER TIMES OF INTERRUPTION OF THE WORK.

FITTINGS, VALVES AND HYDRANTS

A. FITTINGS OR SPECIALS IN SIZES 12" THROUGH 48" SHALL CONFORM TO ALL REQUIREMENTS OF AWWA C-153. FITTINGS AND SPECIALS 12" AND SMALLER SHALL BE CLASS 250. LARGER FITTINGS AND SPECIALS SHALL BE CLASS 150. FITTINGS AND SPECIALS SHALL HAVE MECHANICAL JOINTS AND SHALL BE DUCTILE IRON. CLUSTER VALVES WHENEVER POSSIBLE UNLESS APPROVED BY THE VILLAGE.

B.

MAXIMUM SPACING UNLESS OTHERWISE APPROVED		
	HYDRANTS	VALVES
SINGLE & TWO FAMILY RESIDENTIAL	500'	800'
INDUSTRIAL, COMMERCIAL & MULTI-FAMILY	300'	500'

C. ALL TEES AND CROSSES SHALL BE VALVED IN EACH DIRECTION UNLESS OTHERWISE APPROVED.

D. NO VALVE SHALL BE OPERATED BY PERSONNEL OTHER THAN A REPRESENTITIVE EMPLOYED BY THE VILLAGE.

UTILITY STAKING

A. OFFSETS EVERY 25' ON CURVES. OFFSETS EVERY 100' ON STRAIGHT SECTIONS. FLOW LINE OF WATER MAIN (CUT) MARKED EVERY 100' AND OFFSETS SHALL BE CLEARLY MARKED AND EVERY HYDRANT WITH TOP OF CURB ELEVATION.

BORING AND CASING PIPE DETAIL

A. SEE DETAILS ON PAGE 500-3 AND 500-4

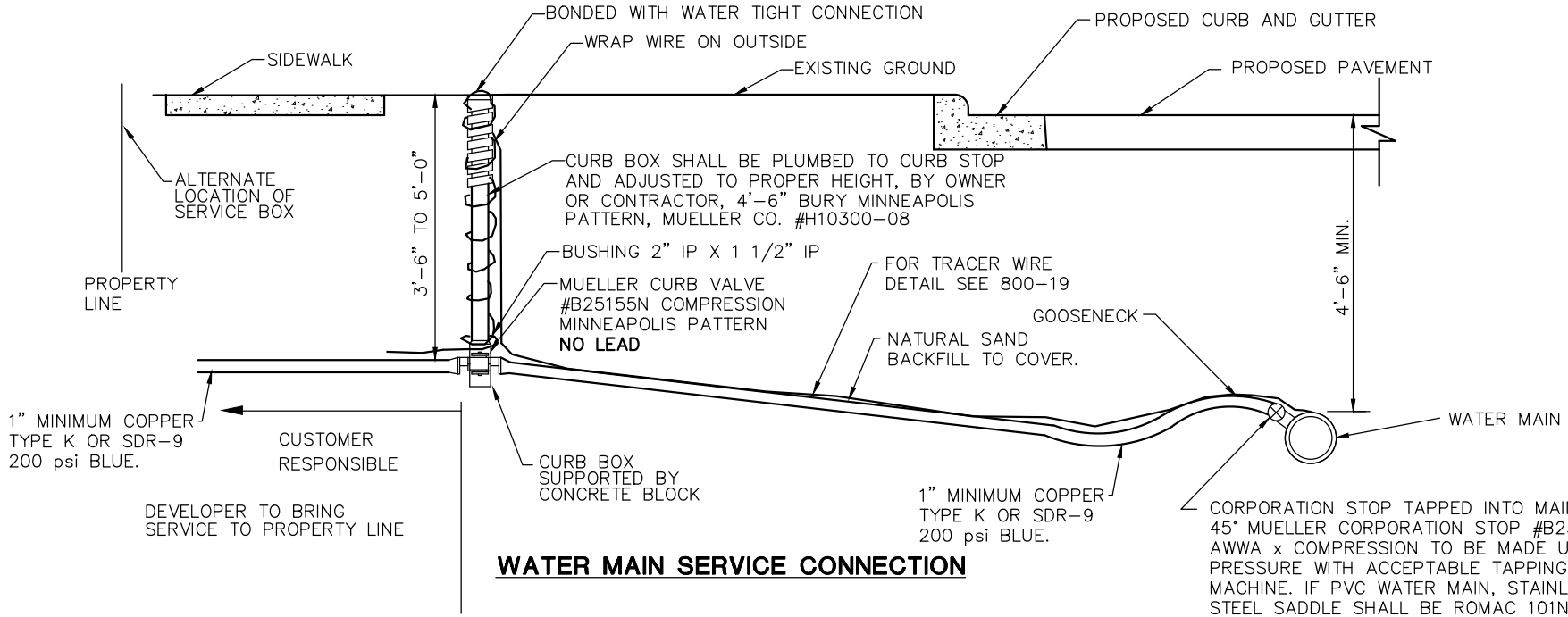

WATER MAIN SERVICE CONNECTION

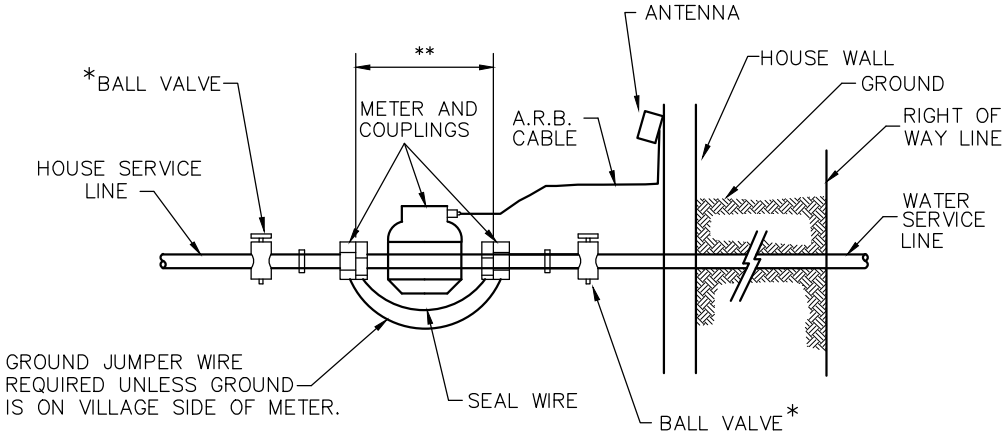

** A JUMPER SUPPLIED BY WATER DEPT. UPON REQUEST

INSIDE WATER METER

*A GATE VALVE IS REQUIRED ON EACH SIDE OF 1 1/2" AND LARGER SERVICE LINES

NOTES

A. MINIMUM 1" WATER SERVICE SHALL BE COPPER TYPE K OR SDR-9 200 psi BLUE.

B. WATER SERVICE SHALL BE A MINIMUM OF 10' MEASURED HORIZONTALLY FROM THE SEWER SERVICE AND SHALL BE A MINIMUM OF 18" ABOVE THE CROWN OF THE SANITARY SEWER MAIN WHERE THE WATER SERVICE CROSSES THE SEWER MAIN. WATER SERVICE MAY BE LAID ON BENCH IN THE SEWER LATERAL TRENCH IF CROWN IS A LEAST 18" BELOW INVERT OF WATER SERVICE, AND THE MINIMUM DISTANCE BETWEEN THE WATER SERVICE AND THE SEWER LATERAL IS 5'-0".

C. INSIDE METER SETTER PROVIDED WITH TAP FEE.INSIDE SETTER CUSTOMER IS RESPONSIBLE FOR METER FREEZE UP. VILLAGE INSTALLS METER AND REMOTE WIRE.

D. CURB BOX MAY BE PLACED BETWEEN SIDEWALK AND PROPERTY LINE.

E. ANY TAPS IN C909 OR IF 2" AND LARGER WILL REQUIRE A SADDLE.

VILLAGE OF COVINGTON CHOICE ONE ENGINEERING	WATER MAIN SERVICE CONNECTION	REVISIONS: 10-4-2012	DATE APPROVED: NOV. 2003 PAGE No. 800-7

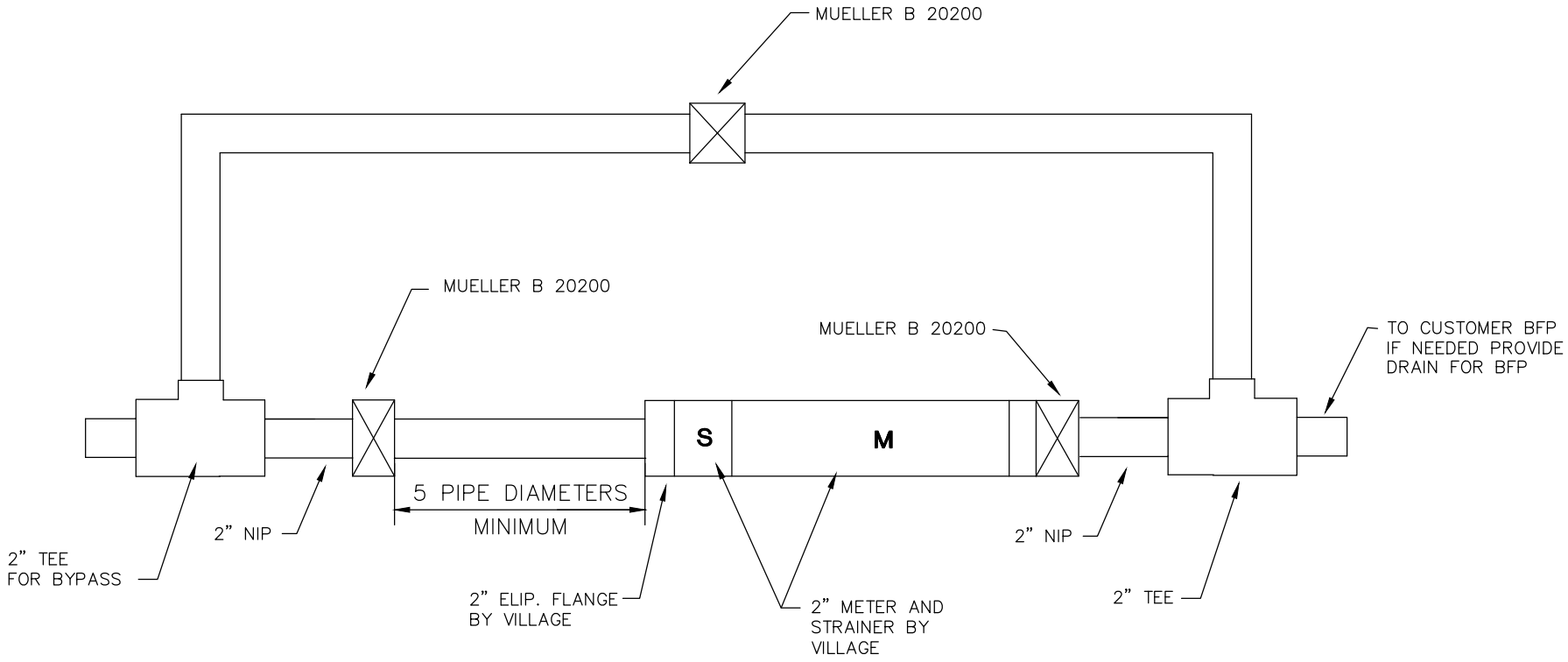

NOTES

A. CENTERLINE OF METER TO BE NO MORE THAN 36" FROM THE FLOOR.

B. METER MUST BE MOUNTED HORIZONTALLY.

C. USE STAINLESS STEEL OR BRASS NUTS AND BOLTS.

D. METER BYPASS ASSEMBLY AND METER SETTING TO BE CONSTRUCTED OF PVC SCH. 80, BRASS OR COPPER. NO FEMALE PVC THREADS PERMITTED.

E. ALL PIPING TO BE THOROUGHLY SUPPORTED.

F. THE VILLAGE IS NOT RESPONSIBLE FOR MAINTENANCE OF INSIDE PLUMBING.

G. PROVIDE APPROVED BACKFLOW PREVENTER REGISTERED WITH THE VILLAGE AND THE COUNTY.

H. PROVIDE TWO OR THREE CONDUCTOR WIRE TO OUTSIDE OF BUILDING NEAR ELECTRIC METER 18–22 GAUGE WIRE.

I. BYPASS VALVE SHALL BE LOCKABLE.

VILLAGE OF COVINGTON CHOICE ONE ENGINEERING	2" COMPOUND METER WITH BYPASS	REVISIONS:	DATE APPROVED: NOV. 2003 PAGE No. 800–8

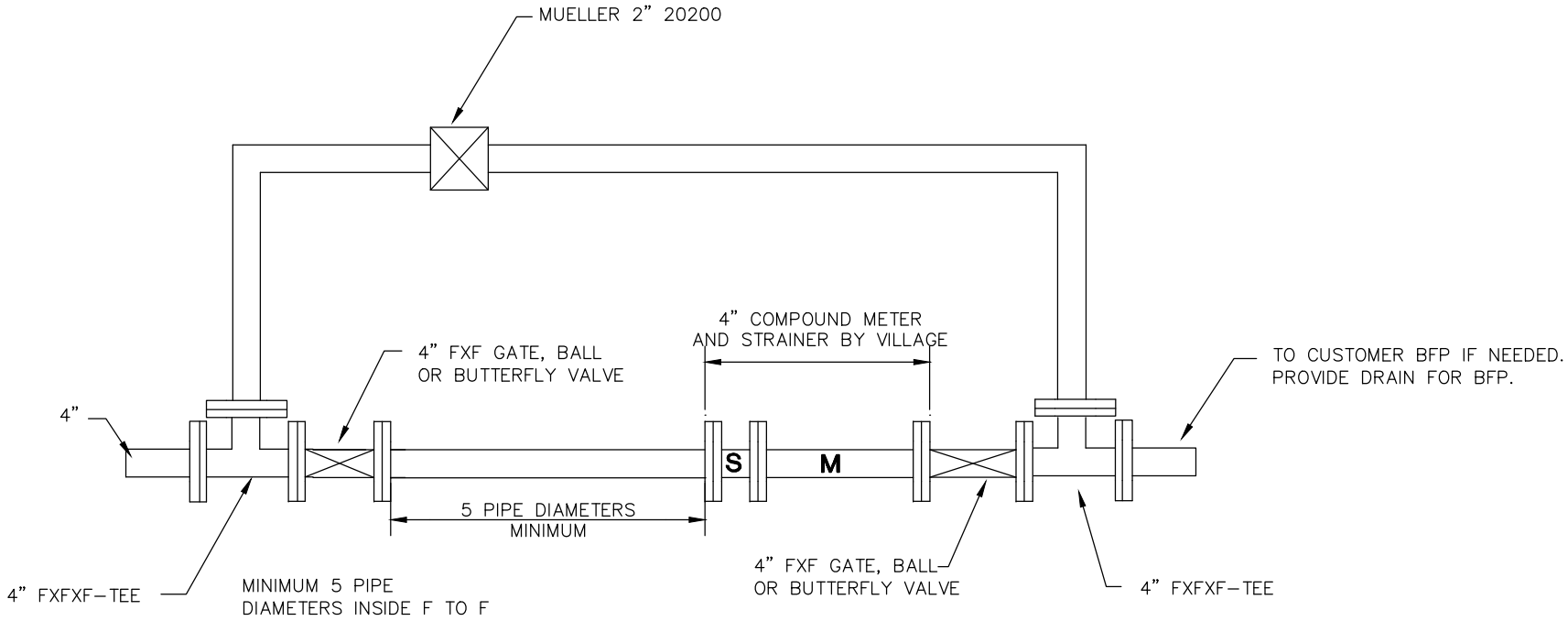

NOTES

A. CENTERLINE OF METER TO BE NO MORE THAN 36" FROM THE FLOOR.

B. METER MUST BE MOUNTED HORIZONTALLY.

C. FULL FACE FLANGE GASKETS AND STAINLESS STEEL OR BRASS NUTS AND BOLTS TO BE USED.

D. METER BYPASS ASSEMBLY AND METER SETTING TO BE CONSTRUCTED OF PVC SCH. 80, BRASS OR COPPER. NO FEMALE PVC THREADS PERMITTED.

E. ALL PIPING TO BE THOROUGHLY SUPPORTED.

F. THE VILLAGE IS NOT RESPONSIBLE FOR MAINTENANCE OF INSIDE PLUMBING.

G. PROVIDE APPROVED BACKFLOW PREVENTER REGISTERED WITH THE VILLAGE AND THE COUNTY.

H. PROVIDE 2 OR 3 CONDUCTOR WIRE TO OUTSIDE OF BUILDING NEAR ELECTRIC METER 18-22 GAUGE WIRE.

I. BYPASS VALVE SHALL BE LOCKABLE.

VILLAGE OF COVINGTON CHOICE ONE ENGINEERING	4" COMPOUND METER WITH BYPASS	REVISIONS:	DATE APPROVED: NOV. 2003 PAGE No. 800-9

NOTES

A. FOR 4" AND GREATER SERVICES

B. PIPING SHALL BE D.I.P. CLASS 350 TO RIGID FLANGE. FROM RIGID FLANGE THROUGH METER VALVES AND BYPASS TO BE DUCTILE, COPPER OR BRASS.

C. FOR 1 1/2" AND 2" SERVICES: WATER DEPARTMENT RECOMMENDS THE USE OF COPPER PIPING

D. FULL PORT BALL VALVES IN LIEU OF VALVES MAY BE INSTALLED FOR 1 1/2" AND 2" METERS MUST BE LOCKABLE.

E. BYPASS MANDATORY FOR ALL METERS. BYPASS VALVE TO BE LOCKABLE.

F. DUAL INSTALLATION FOR BACKFLOW PREVENTION DEVICES IS OPTIONAL FOR 1 1/2" –2" METERS.

G. ALTERNATE DESIGNS MAY BE SUBMITTED TO WATER ENGINEERING FOR APPROVAL.

H. PROVIDE SPREADER DEVICE FOR PROPER ALIGNMENT ON INSTALLATION OF METER SPREAD.

I. NO FLANGE ADAPTERS BEFORE INITIAL SHUT–OFF VALVE(S)

METER SPREAD (FACE TO FACE)

1 1/2"	28"	F.I.P.
2"	30"	FLANGED
3"	46"	FLANGED
4"	56"	FLANGED
5"	60"	FLANGED

8" AND LARGER TO BE REVIEWED BY THE VILLAGE
(F.I.P.– FEMALE IRON PIPE THREAD)

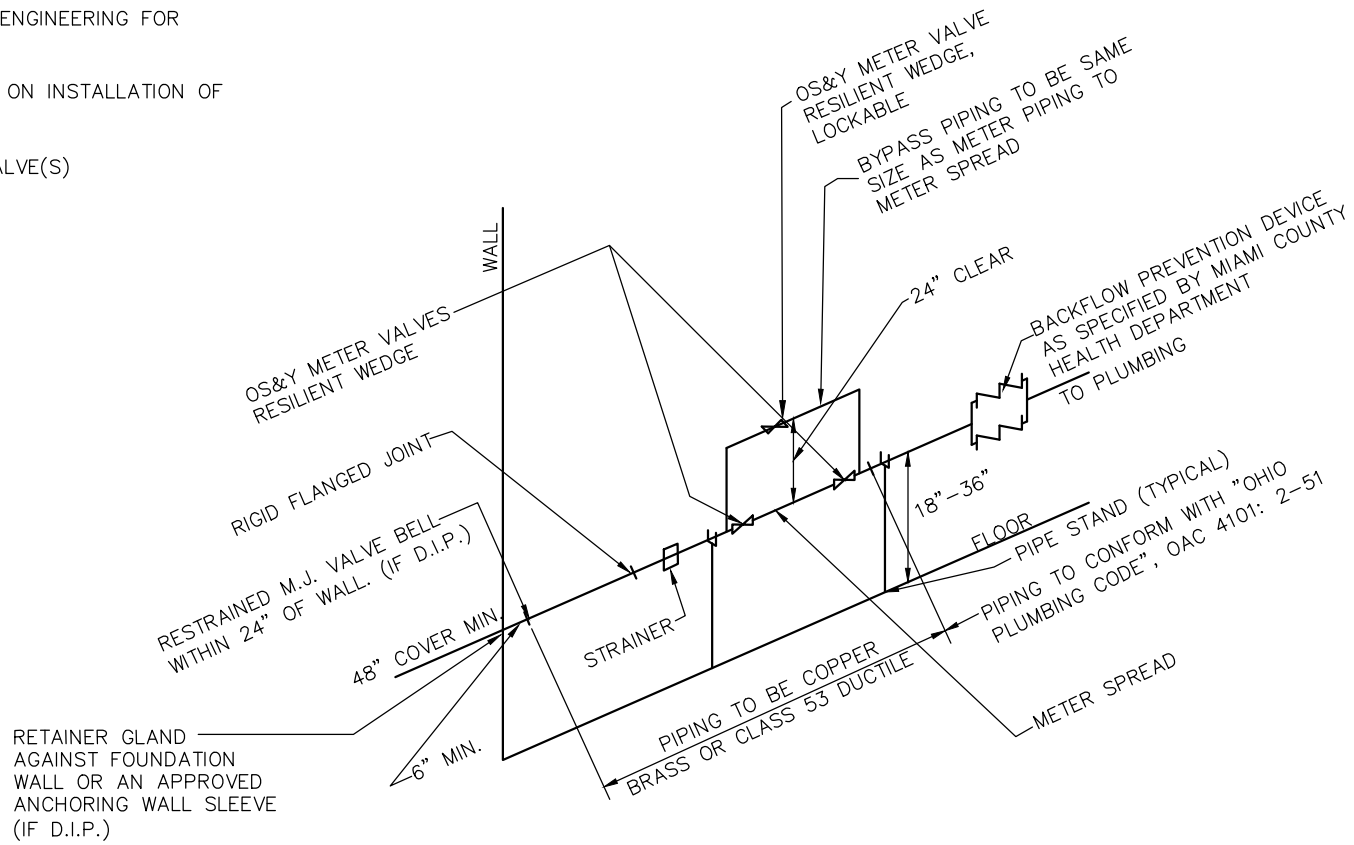

VILLAGE OF COVINGTON CHOICE ONE ENGINEERING	TYPICAL LARGER METER LAYOUT IN BUILDING	REVISIONS: 10–4–2012	DATE APPROVED: NOV. 2003 PAGE No. 800–10

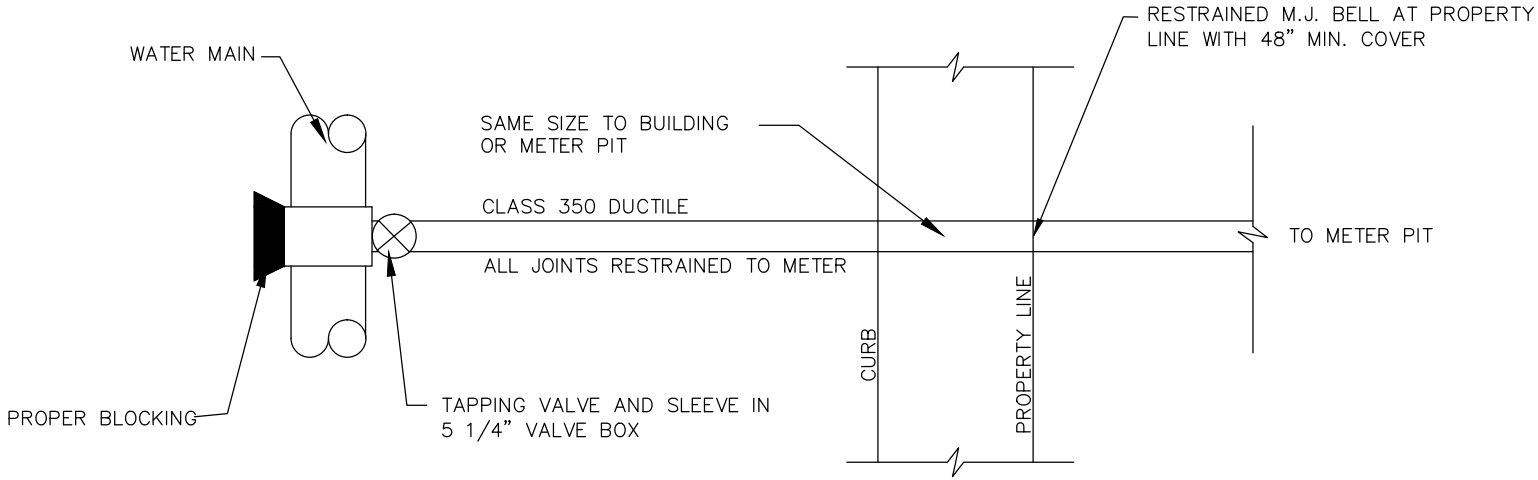

SERVICE TEES ARE PERMITTED IF:

A. SHOWN ON AN APPROVED SET OF CONSTRUCTION PLANS.

B. 4" MINIMUM BRANCH AND SERVICE LINE WITH GATE VALVE WITHIN 3' OF MAIN.

NOTE:

A. IF NO CLEARANCE BETWEEN BUILDING AND PROPERTY LINE, METER MAY BE LOCATED IN BUILDING IF APPROVED BY THE VILLAGE.

VILLAGE OF COVINGTON CHOICE ONE ENGINEERING	4" AND LARGER WATER MAIN SERVICE CONNECTION (DOMESTIC)	REVISIONS: 10-4-2012	DATE APPROVED: NOV. 2003 PAGE No. 800-11

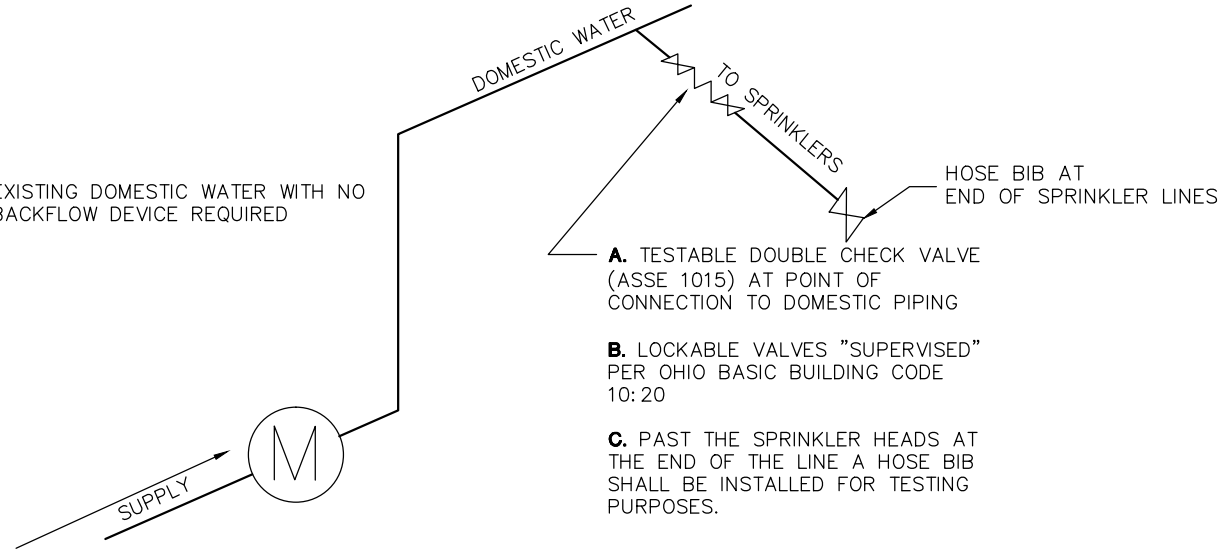

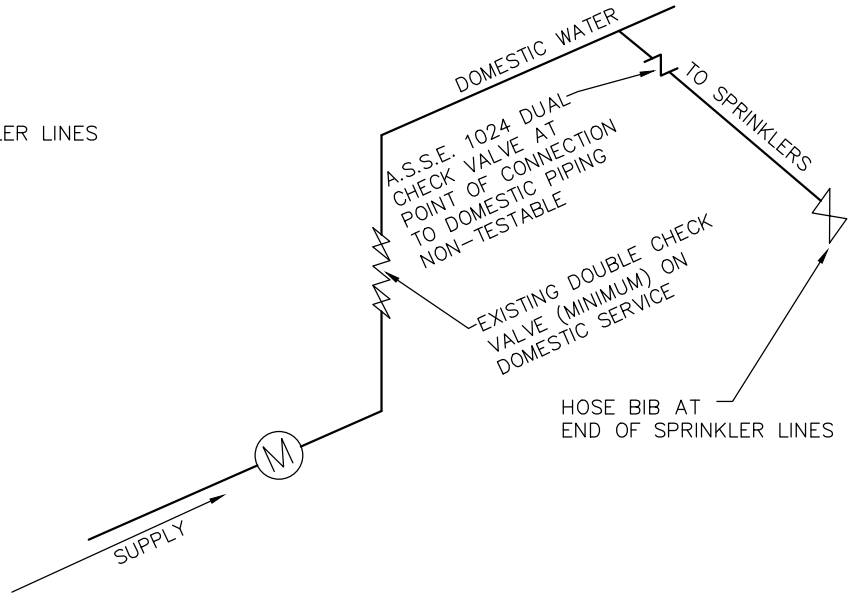

NOTE:

A. ADDITION OF BACKFLOW DEVICE ONTO EXISTING FIRE SUPPRESSION SYSTEM WILL AFFECT ORIGINAL FLOW CALCULATION

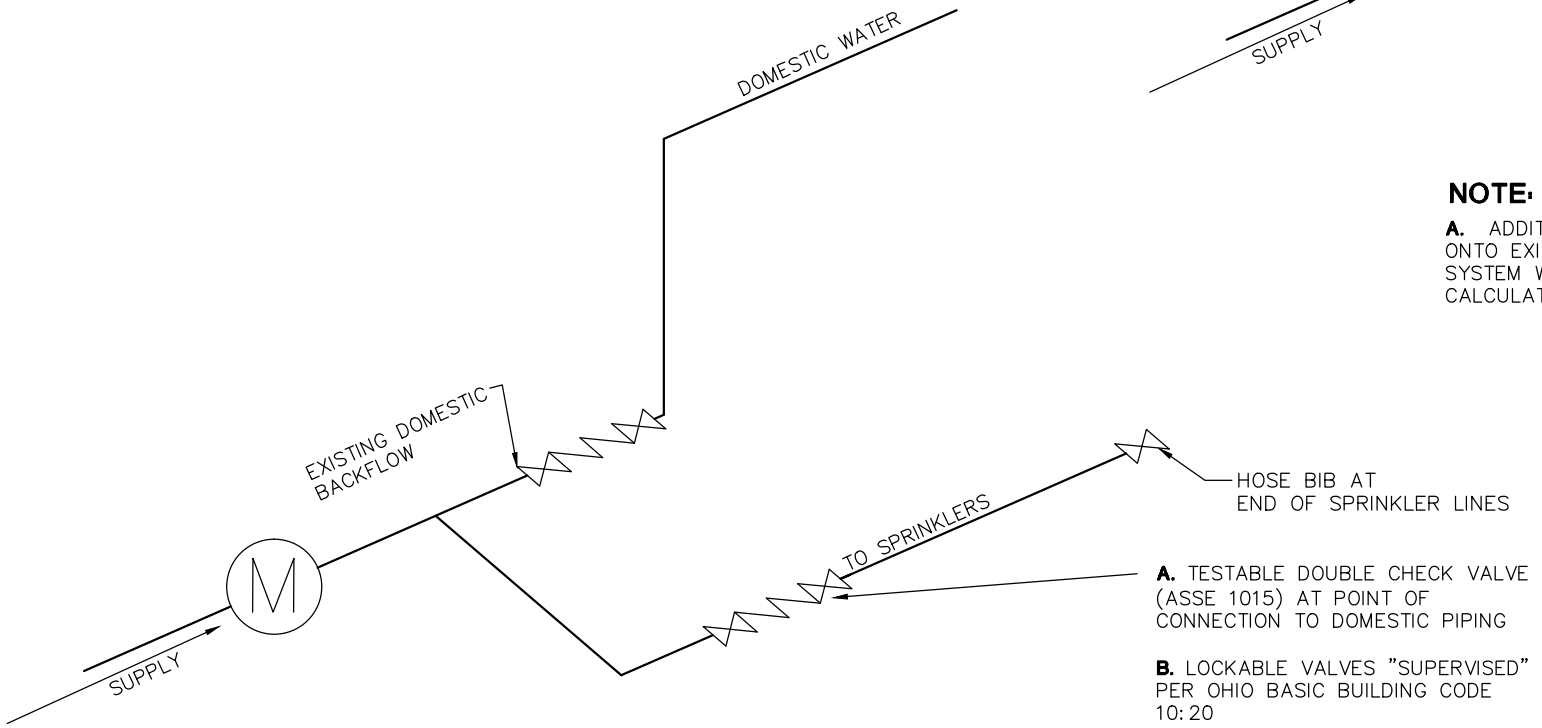

VILLAGE OF COVINGTON CHOICE ONE ENGINEERING	LIMITED AREA SPRINKLER SYSTEM DETAIL	REVISIONS:	DATE APPROVED: NOV. 2003 PAGE No. 800-12

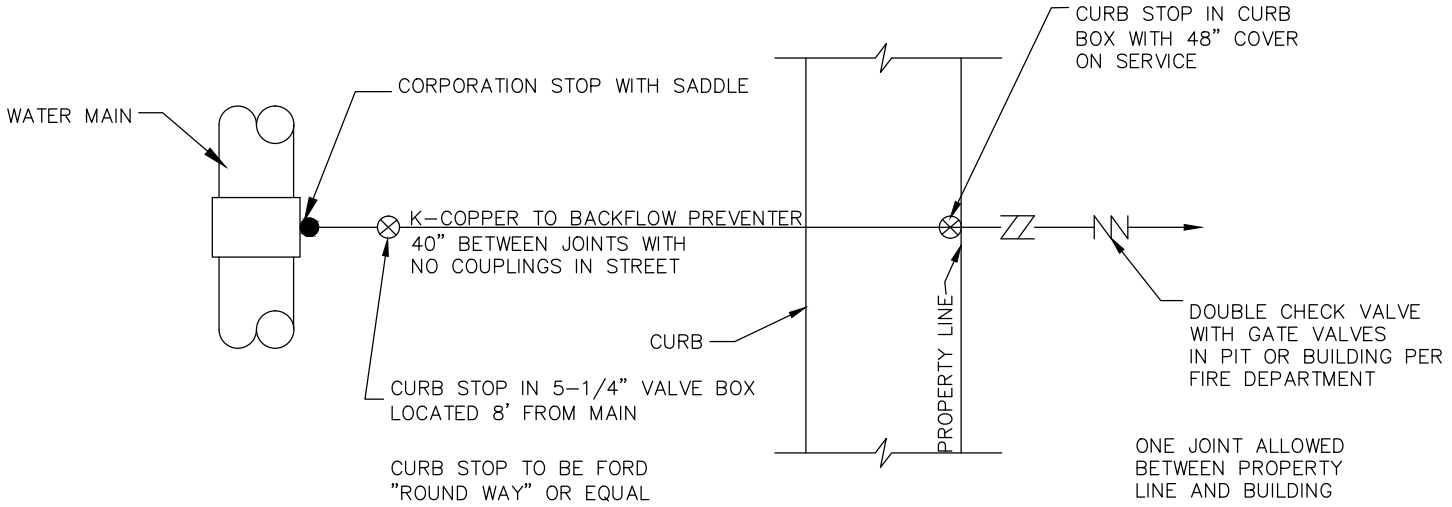

2" FIRE LINE SERVICE

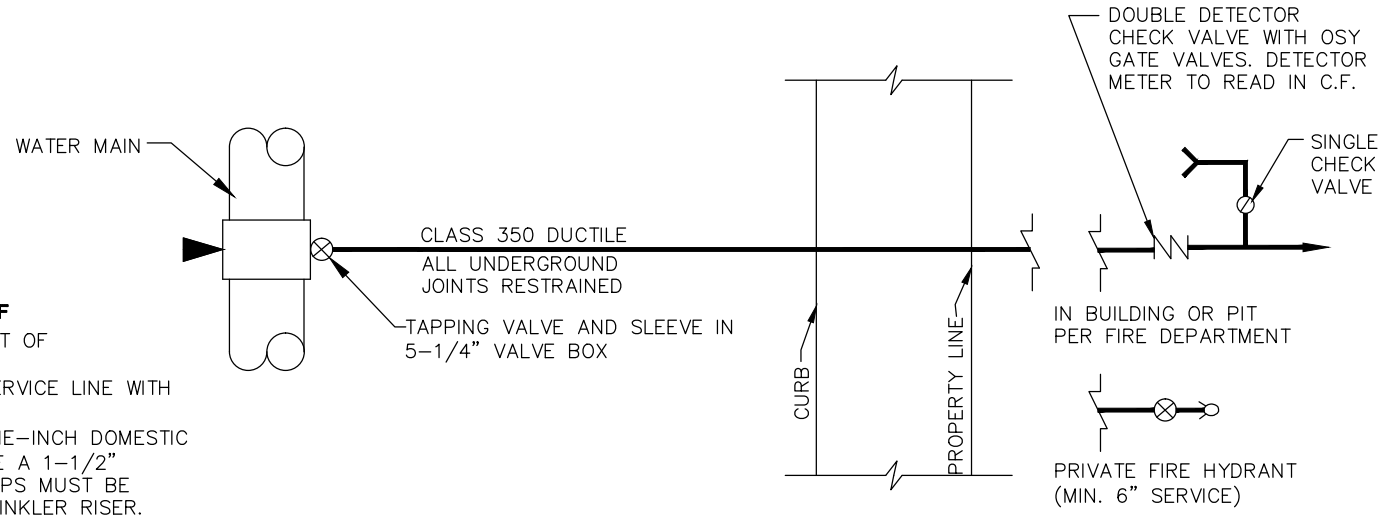

SERVICE TEES ARE PERMITTED IF

A. SHOWN ON AN APPROVED SET OF CONSTRUCTION DRAWINGS.

B. 4" MINIMUM BRANCH AND SERVICE LINE WITH GATE VALVE WITHIN 3' OF MAIN.

C. 6" FIRE LINE MAY HAVE A ONE-INCH DOMESTIC TAP AND 8" FIRE LINE MAY HAVE A 1-1/2" DOMESTIC TAP. ALL DOMESTIC TAPS MUST BE INSTALLED BEFORE THE FIRE SPRINKLER RISER.

4" AND LARGER FIRE LINE SERVICE

WALL/POST INDICATOR VALVES SHALL BE ADDED ON PREMISES AT FIRE DEPARTMENT REQUEST

VILLAGE OF COVINGTON CHOICE ONE ENGINEERING	2" FIRE LINE AND 4" AND LARGER FIRE LINE	REVISIONS: 10-4-2012	DATE APPROVED: NOV. 2003 PAGE No. 800-13

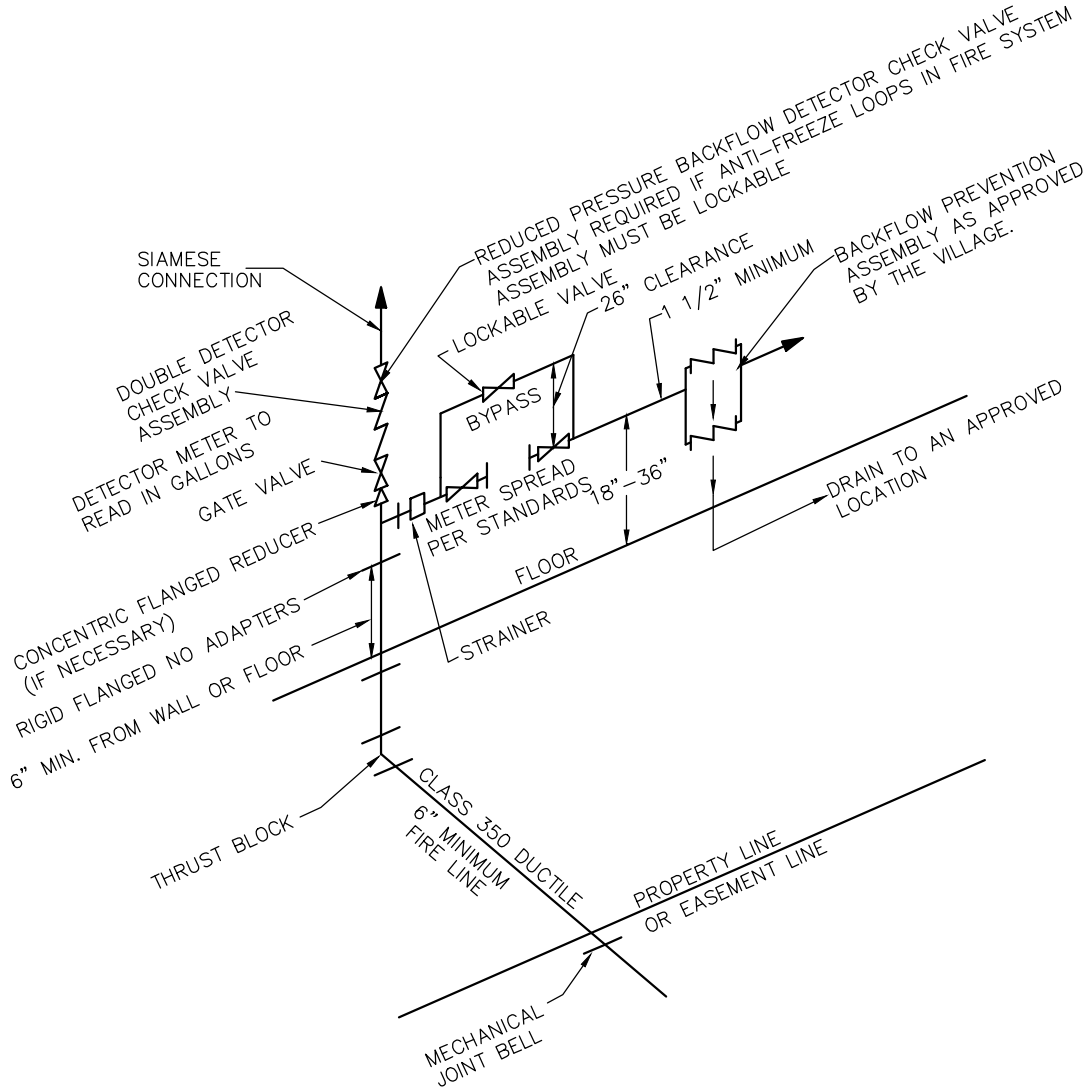

NOTES

A. ALL UNDERGROUND JOINTS MUST BE RESTRAINED.

B. INSIDE PIPING SHALL BE D.I.P. CLASS 350 TO RIGID FLANGE, FROM RIGID FLANGE THROUGH METER VALVES AND BYPASS, TO BE D.I.P. CLASS 350, K-COPPER OR BRASS.

C. MINIMUM 1-1/2" WATER METER.

D. ALTERNATE DESIGN MAY BE SUBMITTED TO VILLAGE FOR APPROVAL.

E. COMBINATION SERVICE NOT PERMITTED INSIDE BUILDING IF THE DOMESTIC METER IS MORE THAN 75 FEET FROM THE PROPERTY/EASEMENT LINE.

F. 6" FIRE LINE MAY HAVE A 1" DOMESTIC TAP AND 8" FIRE LINE MAY HAVE A 1-1/2" DOMESTIC TAP. ALL DOMESTIC TAPS MUST BE INSTALLED BEFORE THE SPRINKLER RISER.

G. SIAMESE CONNECTIONS (2-1/2" NATIONAL STANDARD THREADS) TO BE LOCATED ON THE OUTSIDE OF BUILDING.

H. UP TO 1" DOMESTIC TAPS CAN BE MADE ON FIRE LINES 6" OR LARGER AS THE TAP IS MADE PRIOR TO THE DETECTION CHECK AND METER.

VILLAGE OF COVINGTON CHOICE ONE ENGINEERING	COMBINATION FIRE AND DOMESTIC IN BUILDING	REVISIONS: 10-4-2012	DATE APPROVED: NOV. 2003 PAGE No. 800-14

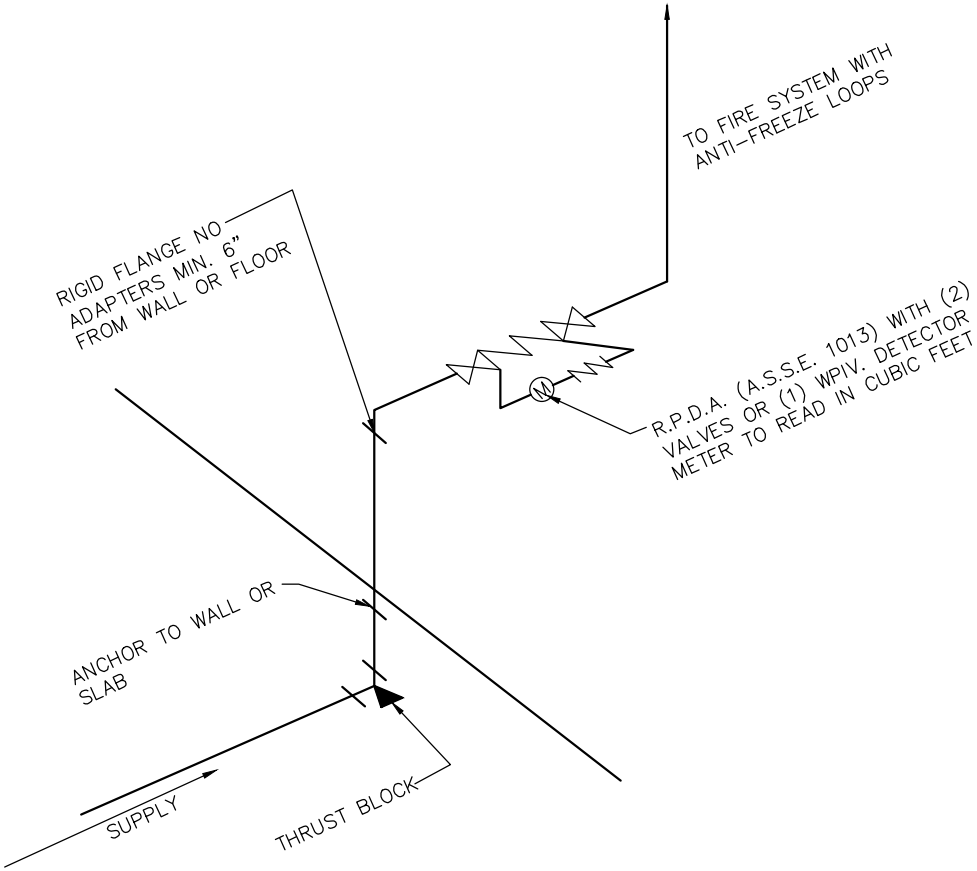

NOTE:

A. ALL BACKFLOW PREVENTION ASSEMBLIES SHALL BE DELIVERED FOR INSTALLATION COMPLETELY ASSEMBLED BY THE ORIGINAL MANUFACTURER WITH ALL COMPONENTS AS APPROVED

B. ADDITION OF BACKFLOW DEVICE ONTO EXISTING FIRE SUPPRESSION SYSTEMS WILL AFFECT ORIGINAL FLOW CALCULATIONS

C. CLASS 350 DUCTILE IRON TO VALVE. ALL JOINTS RESTRAINED

VILLAGE OF COVINGTON CHOICE ONE ENGINEERING	# REDUCED PRESSURE DETECTOR ASSEMBLY	REVISIONS: 10-4-2012	DATE APPROVED: NOV. 2003 PAGE No. 800-15

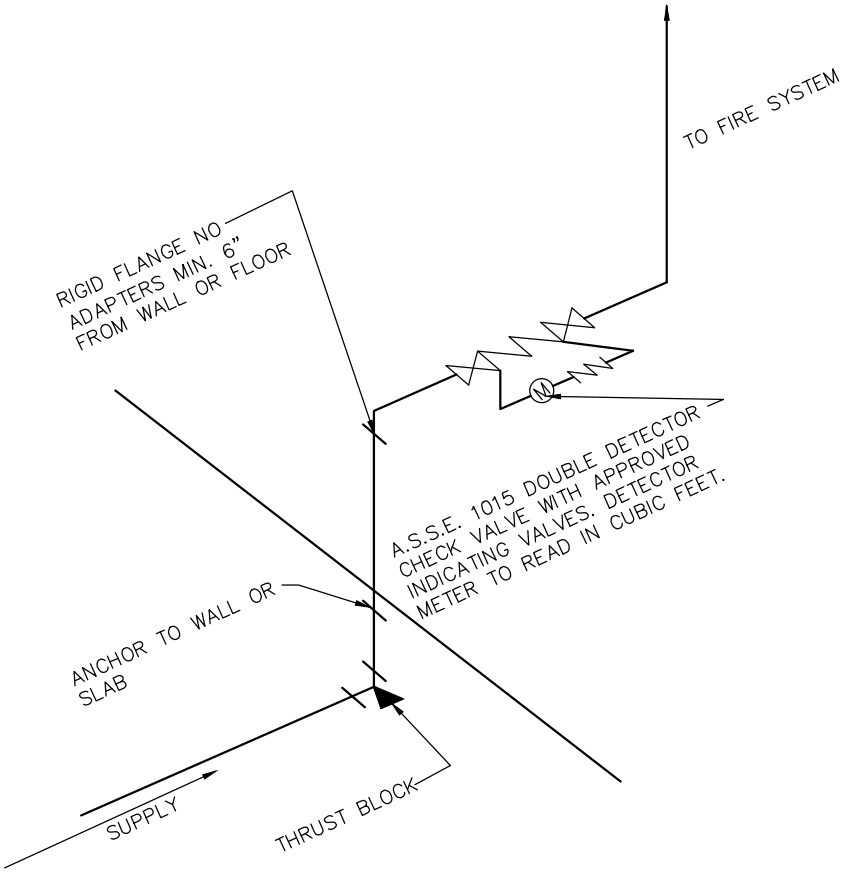

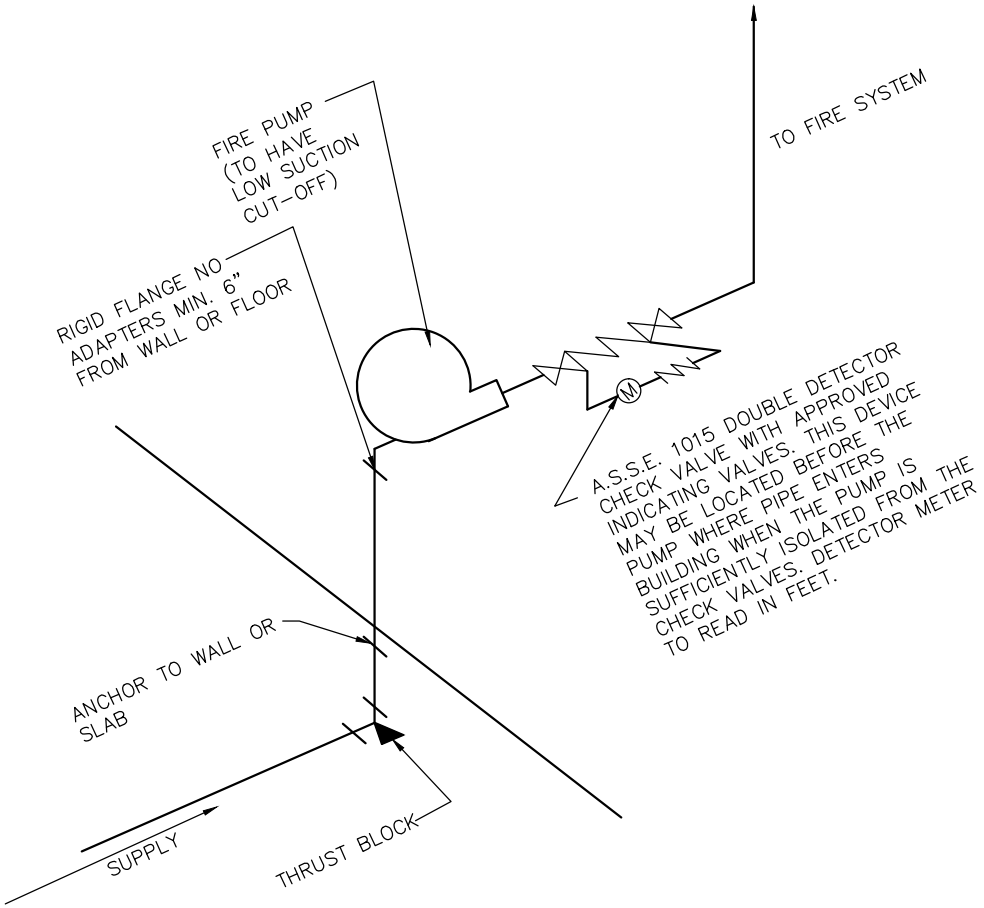

NOTE:

A. ALL BACKFLOW PREVENTION ASSEMBLIES SHALL BE DELIVERED FOR INSTALLATION COMPLETELY ASSEMBLED BY THE ORIGINAL MANUFACTURER WITH ALL COMPONENTS AS APPROVED

B. CLASS 350 DUCTILE IRON TO VALVE. ALL JOINTS RESTRAINED

VILLAGE OF COVINGTON CHOICE ONE ENGINEERING	**DOUBLE DETECTOR CHECK VALVE ASSEMBLY DETAIL**	REVISIONS: 10-4-2012	DATE APPROVED: NOV. 2003 PAGE No. 800-16

NOTES

A. SEE "STANDARDS FOR TAPS, SERVICES AND METERS" FOR TYPICAL NOTES.

B. BACKFLOW PREVENTION DEVICE REQUIRED–CONTACT WATER METER DEPARTMENT FOR APPROVED DEVICE.

C. PROVIDE APPROVED DRAIN FOR IRRIGATION SYSTEM.

D. ALTERNATE DESIGNS MUST BE SUBMITTED FOR APPROVAL.

E. IF METER IS INSTALLED INSIDE CRAWL SPACE AREA, IT SHALL BE PLACED WITHIN 2' OF OPENING.

F. THE CURB BOX MUST BE BROUGHT UP TO FINISH GRADE.

G. NO OUTLETS ARE ALLOWED BETWEEN METER AND THE BACKFLOW PREVENTER OR HOSE BIBB VACUUM BREAKER WITH THE EXCEPTION OF ONE SCREW PLUG–IN TAP FOR WINTERIZING/DRAINAGE PURPOSES.

H. THE UNDERGROUND WATER SERVICE SHALL BE K–COPPER UP TO THE BACKFLOW PREVENTER OR HOSE BIBB VACUUM BREAKER.

I. IN CASE OF ADD–ON CONSTRUCTION (WITH AN EXISTING DOMESTIC METER AND SERVICE) LEAD FREE SOLDERED JOINTS WILL BE ACCEPTED AT THE TAKE–OFF TEE ONLY.

J. THE INSTALLATION SHALL BE INSPECTED BY THE VILLAGE.

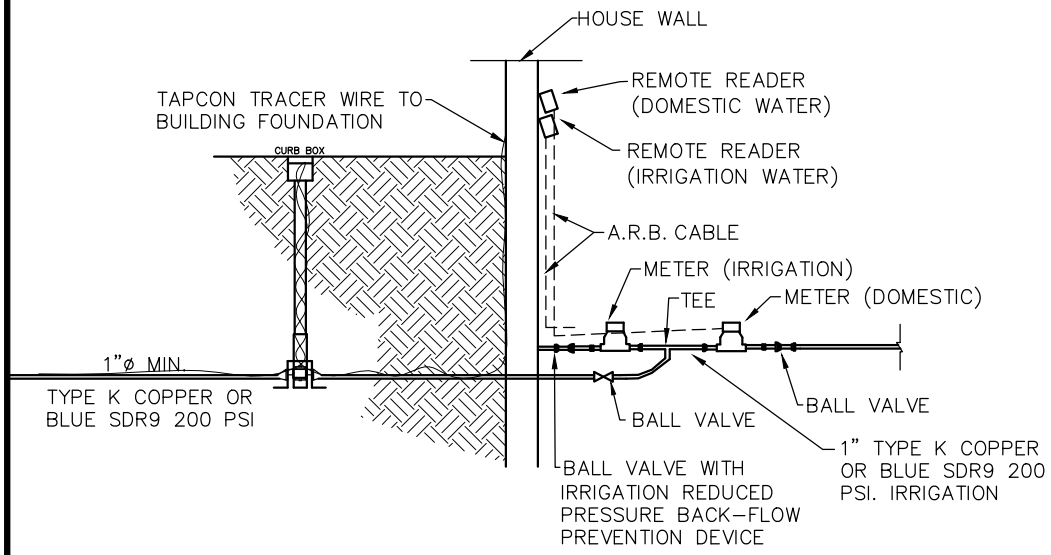

INSTRUCTIONS FOR THE INSTALLATION OF IRRIGATION METERS AND BACKFLOW PREVENTERS FOR IRRIGATION

A. MAKE DRAWING OF THE PROPOSED IRRIGATION SYSTEM. THIS DRAWING MUST BE APPROVED BY VILLAGE AND MIAMI COUNTY HEALTH DEPARTMENT.

B. ALL WORK SHALL BE DONE IN ACCORDANCE WITH THE VILLAGE "STANDARDS FOR TAPS, SERVICES AND METERS".

C. GET THE NECESSARY PERMITS.

1) TAPPING FEE

D. GET FORMS AT MIAMI COUNTY HEALTH DEPARTMENT FOR EACH BACKFLOW PREVENTER TO BE INSTALLED, PRIOR TO DOING THE WORK.

E. AFTER THE BACKFLOW PREVENTERS HAVE BEEN INSTALLED, PLEASE FILL OUT THE FORMS COMPLETELY WITH THE OWNER/LEASEHOLDER'S NAME, ADDRESS (WHERE THE BACKFLOW PREVENTER WAS INSTALLED), LOCATION OF THE BACKFLOW PREVENTER, SIZE, MAKE, MODEL, TEST RESULTS BY A LICENSED PLUMBER, ANNUAL TEST RESULTS THERE AFTER, AND SERIAL NUMBER OF THE BACKFLOW PREVENTER. PLEASE RETURN THE COMPLETED FORMS TO THE VILLAGE.

F. CONTACT BOTH VILLAGE AND THE MIAMI COUNTY HEALTH DEPARTMENT AFTER THE WORK HAS BEEN COMPLETED. BACKFLOW PREVENTERS HAVE TO BE INSPECTED BY BOTH VILLAGE AND THE MIAMI COUNTY HEALTH DEPARTMENT.

G. SEPARATE VALVES, ONE BEFORE AND AFTER, MUST BE PLACED NEAR THE BACKFLOW PREVENTER WHENEVER THE EXISTING BACKFLOW IS REMOVED.

H. HOME OWNER IS RESPONSIBLE FOR FULL COST OF IRRIGATION METER AND BACKFLOW PREVENTION DEVICE.

VILLAGE OF COVINGTON CHOICE ONE ENGINEERING	STANDARD INSTALLATION FOR IRRIGATION METERS AND BACKFLOW PREVENTER	REVISIONS: 10–4–2012	DATE APPROVED: NOV. 2003 PAGE No. 800–17

HOSE BIBB

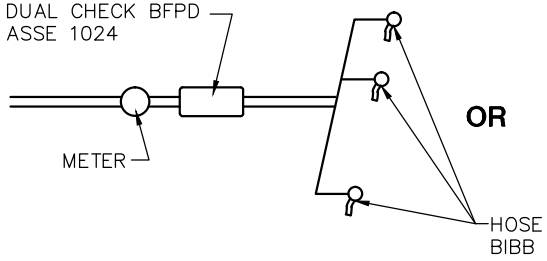

NON–RECERTIFIABLE BFPDS (ASSE 1001, ASSE 1011) ON HOSE BIBBS

YARD HYDRANT

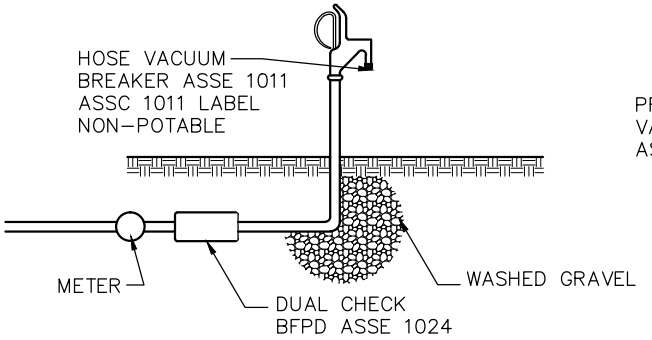

SPRINKLER SYSTEM

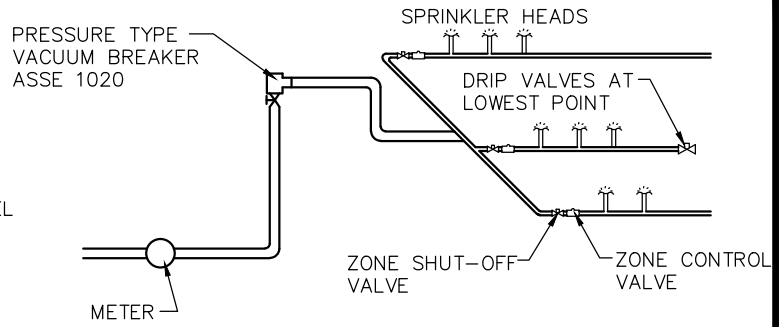

CONDITIONS

A. SHUT–OFF VALVES ARE ALLOWED DOWNSTREAM OF THE BFPD

B. THE PRESSURE TYPE VACUUM BREAKER MUST BE A MINIMUM OF 12" ABOVE THE HIGHEST SPRINKLER HEAD.

YARD MAIN SYSTEM ARRANGEMENT

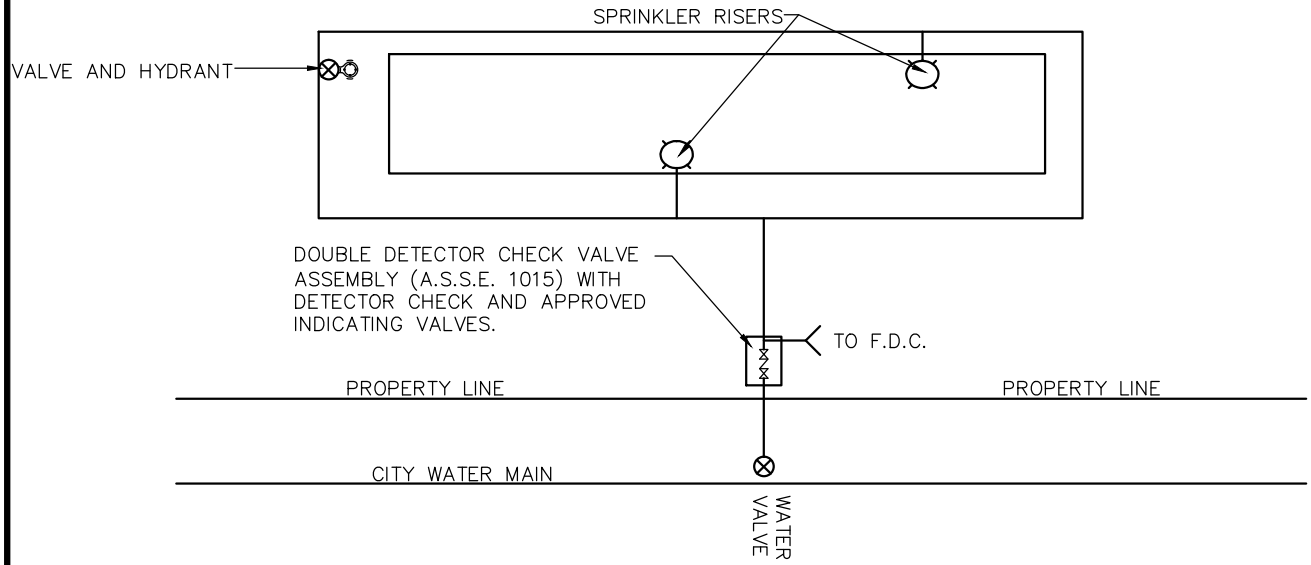

NOTES

A. A DRAWING OF EACH PROPOSED IRRIGATION SYSTEM MUST BE APPROVED BY THE VILLAGE AND MIAMI COUNTY HEALTH DEPARTMENT PRIOR TO CONSTRUCTION.

B. IF IRRIGATION SYSTEM IS NONE OF THE ABOVE, USE A REDUCED PRESSURE BACKFLOW PREVENTER, (ASSE 1013), AFTER THE WATER METER.

VILLAGE OF COVINGTON CHOICE ONE ENGINEERING	IRRIGATION DETAILS	REVISIONS:	DATE APPROVED: NOV. 2003 PAGE No. 800–18

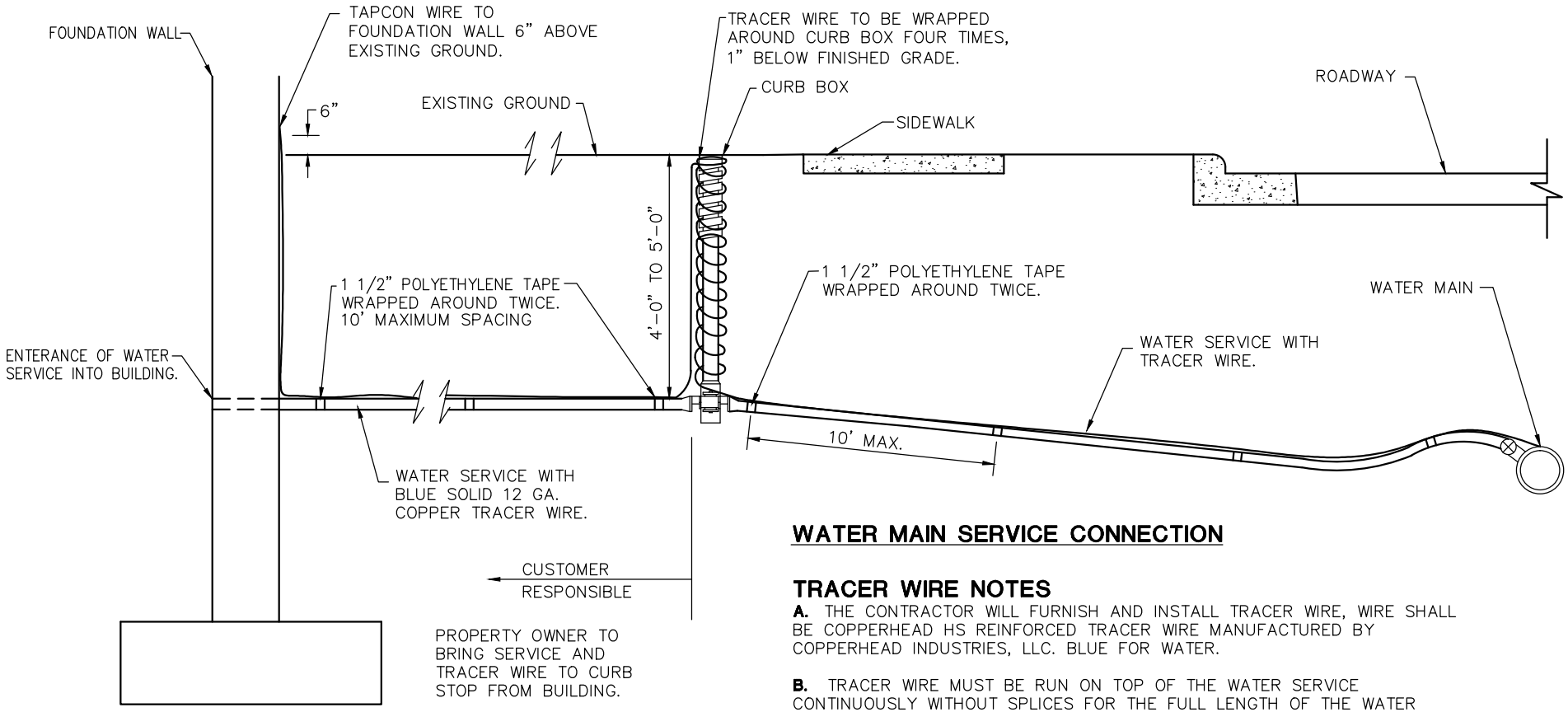

WATER MAIN SERVICE CONNECTION

TRACER WIRE NOTES

A. THE CONTRACTOR WILL FURNISH AND INSTALL TRACER WIRE, WIRE SHALL BE COPPERHEAD HS REINFORCED TRACER WIRE MANUFACTURED BY COPPERHEAD INDUSTRIES, LLC. BLUE FOR WATER.

B. TRACER WIRE MUST BE RUN ON TOP OF THE WATER SERVICE CONTINUOUSLY WITHOUT SPLICES FOR THE FULL LENGTH OF THE WATER SERVICE. THE TRACER WIRE SHALL BE FASTENED TO THE TOP OF THE WATER SERVICE WITH 1 1/2" POLYETHYLENE TAPE WRAPPED AROUND TWICE AT A MAXIMUM DISTANCE OF 10'.

C. TRACER WIRE THAT MUST BE SPLICED SHALL USE SNAKEBITE TRACER WIRE CONNECTORS MANUFACTURED BY COPPERHEAD INDUSTRIES, LLC.

D. TRACER WIRE WILL BE INSTALLED ON ALL NEW WATER SERVICE INSTALLATIONS AND WILL COME TO THE SURFACE AT THE CURB BOX AND AT THE BUILDING FOUNDATION.

E. TRACER WIRE SHALL DAYLIGHT AT THE POINT OF ENTRY AT THE FOUNDATION OF THE BUILDING. TAPCON WIRE TO FOUNDATION, 6" ABOVE GROUND LEVEL.

F. ALL MATERIAL, LABOR, EQUIPMENT NEEDED FOR THE INSTALLATION OF THE TRACER WIRE SHALL BE INCIDENTAL TO PIPE INSTALLATION.

VILLAGE OF COVINGTON CHOICE ONE ENGINEERING	TRACER WIRE FOR WATER SERVICE DETAIL	REVISIONS:	DATE APPROVED: OCT. 2012 PAGE No. 800-19